※ History List

Version	Date	Update Information
1.0	’15.02.27	- 2015 New EHS SPLIT TDB Released. (Modify the Spec Note)
1.1	’15.03.06	- Modify : Note(Spec, Capacity Table) / Electric Diagram / OD Drawing Mixing Valve - Add : Mixing Valve Page / DHW Oper. Rnage
1.2	’15.04.06	- Modify : Sound Pressure - Add : SCOP / ESEER

EHS

Technical Data Book

EHS Split (50Hz)

SAMSUNG

Contents

I. Products

1. Nomenclature 4
2. Line-up 6
3. System Specification..... 7

II. Outdoor Unit

1. Specifications 12
2. Capacity Tables 16
3. Capacity Correction 19
4. Dimensional Drawings 20
5. Cycle Diagrams 23
6. Wiring Diagrams 25
7. Electric Specifications 28
8. Sound Pressure Level 29
9. Operation Range 32

III. Hydro Unit

1. Specifications 34
2. Dimensional Drawings 36
3. Cycle Diagrams 37
4. Wiring Diagrams 38
5. Electric Specifications 40
6. Hydraulic Performance 43

IV. Application

Application Examples 45

Mixing Valve..... 47

I. Products

1. Nomenclature 4
2. Line-up 6
3. System Specification..... 7

1. Nomenclature

1-1. Outdoor Unit

Model Name (New)

AE	060	J	X	E	D	E	H	/	EU
(1)	(2)	(3)	(4)	(5)	(6)	(7)	(8)		(Buyer)

(1) Classification	
AE	EHS

(2) Capacity
x 1/10 kW (3 digits)

(3) Version	
J	2015

(4) Product Type	
N	Indoor
X	Outdoor

(5) Type	
E	Single (EHS)

(6) Feature 1	
D	DELUXE (Basic)

(7) Rating Voltage	
E	1Φ, 220~240V, 50Hz
G	3Φ, 380~415V, 50Hz

(8) Mode		
H	Heat Pump	R410A

1. Nomenclature

1-2. Indoor Unit

Model Name (New)

AE	090	J	N	Y	D	E	H	/	EU
(1)	(2)	(3)	(4)	(5)	(6)	(7)	(8)		(Buyer)

(1) Classification I	
AE	EHS

(2) Capacity
x 1/10 kW (3 digits)

(3) Version	
J	2015

(4) Product Type	
N	Indoor
X	Outdoor

(5) Type	
Y	Hydro Unit (Wall Mounted)
B	Hydro Unit (Floor Standing)
X	Cylinder Unit
W	Water Tank

(6) Feature 1	
D	STANDRAD

(7) Rating Voltage	
E	1Φ, 220~240V, 50Hz
G	3Φ, 380~415V, 50Hz

(8) Mode		
H	Heat Pump	R410A

2. Line-up

2-1. Outdoor Unit

Split Type	Capacity (kW)					
	4.0	6.0	9.0	12.0	14.0	16.0
Single Phase	●	●	●	●	●	●
3 Phase			●	●	●	●

2-2. Indoor Unit

Hydro Unit	Capacity (kW)	
	9.0	16.0
Single Phase	●	●
3 Phase	●	●

2-3. Combination Table

Outdoor Unit		Hydro Unit			
Model Name	Type	AE090JNYDEH/**	AE090JNYDGH/**	AE160JNYDEH/**	AE160JNYDGH/**
AE040JXEDEH/EU	Reversible	●			
AE060JXEDEH/EU	Reversible	●			
AE090JXEDEH/EU	Reversible	●			
AE120JXEDEH/EU	Reversible			●	
AE140JXEDEH/EU	Reversible			●	
AE160JXEDEH/EU	Reversible			●	
AE090JXEDGH/EU	Reversible		●		
AE120JXEDGH/EU	Reversible				●
AE140JXEDGH/EU	Reversible				●
AE160JXEDGH/EU	Reversible				●

3. System Specification

Model Name		Indoor Unit			AE090JNYDEH/EU	AE090JNYDEH/EU	AE090JNYDEH/EU
		Outdoor Unit			AE040JXEDEH/EU	AE060JXEDEH/EU	AE090JXEDEH/EU
System	Mode			-	Heat Pump (A2W)	Heat Pump (A2W)	Heat Pump (A2W)
	Performance (A7/W35) *1	Nominal Capacity	Heating	W	4,400	6,000	9,000
				Btu/h	15,000	20,500	30,700
			Cooling	W	5,000	6,500	8,000
				Btu/h	17,100	22,200	27,300
		Power Input (Nominal)	Heating	W	860	1,250	2,010
			Cooling		1260	1750	2200
		Current Input (Nominal)	Heating	A	4.1	5.7	9.2
			Cooling		5.7	8.0	10.1
		COP (Nominal Heating)		W/W	5.10	4.80	4.48
		EER (Nominal Cooling)		W/W	3.97	3.71	3.64
		SCOP			4.522	4.539	4.577
		ESEER			5.367	5.349	4.789
	Performance (A2/W35) *2	Capacity	Heating	W	3400	4600	7700
		COP		W/W	3.52	3.31	3.38
	Performance (A-7/W35) *3	Capacity	Heating	W	3750	5100	7600
		COP		W/W	2.62	2.49	2.45
	Field Wiring	MCA		A	20	20	22
		MFA		A	25	25	27.5
	Water Connections	Water Flow Rate (Heating / Cooling)		LPM	13/15	17/20	26/25
		Water Pressure (Max)		bar	3	3	3
		Water Pipe	Inlet	Φ, inch	BSPP male 1 1/4"	BSPP male 1 1/4"	BSPP male 1 1/4"
			Outlet	Φ, inch	BSPP male 1 1/4"	BSPP male 1 1/4"	BSPP male 1 1/4"
		Leaving Water Temperature	Heating	°C	25~55	25~55	25~55
			Cooling	°C	5~25	5~25	5~25
	Refrigerant Connections	Liquid Pipe		Φ, mm	6.35	6.35	6.35
				Φ, inch	1/4"	1/4"	1/4"
		Gas Pipe		Φ, mm	15.88	15.88	15.88
				Φ, inch	5/8"	5/8"	5/8"
		Installation Limitation	Max. Length	m	30	30	50
			Max. Height	m	20	20	30
		Chargeless Length		m	15	15	15
	Operating Temp. Range	Heating (A2W) *4		℃	-25~35	-25~35	-25~35
		Cooling (A2W)		℃	10~46	10~46	10~46
		DHW (A2W) *5		℃	-25~43	-25~43	-25~43

*1) A2W Condition #1 : (Heating) Water In/Out 30℃/35℃, Outdoor Air 7℃DB/6℃WB; (Cooling) Water In/Out 23℃/18℃, Outdoor Air 35℃DB.
*2) A2W Condition #2 : (Heating) Water In/Out 30℃/35℃, Outdoor Air 2℃DB
*3) A2W Condition #3 : (Heating) Water In/Out 30℃/35℃, Outdoor Air -7℃DB
*4) The system is operated in (-25℃ ≤ Outdoor temp <-20℃) condition, but no guarantee of capacity.
*5) The system is operated by only Booster Heater in special condition(35℃ < Outdoor temp. ≤ 43℃).

3. System Specification

Model Name		Indoor Unit			AE160JNYDEH/EU	AE160JNYDEH/EU	AE160JNYDEH/EU
		Outdoor Unit			AE120JXEDEH/EU	AE140JXEDEH/EU	AE160JXEDEH/EU
System	Mode			-	Heat Pump (A2W)	Heat Pump (A2W)	Heat Pump (A2W)
	Performance (A7/W35) *1	Nominal Capacity	Heating	W	12,000	14,000	16,000
				Btu/h	40,900	47,800	54,600
			Cooling	W	12,000	14,000	15,000
				Btu/h	40,900	47,800	51,200
		Power Input (Nominal)	Heating	W	2,590	3,150	3,760
			Cooling		3100	3800	4140
		Current Input (Nominal)	Heating	A	11.7	14.3	16.9
			Cooling		14.0	17.0	18.6
		COP (Nominal Heating)		W/W	4.63	4.44	4.26
		EER (Nominal Cooling)		W/W	3.87	3.68	3.62
		SCOP			4.627	4.560	4.515
		ESEER			4.933	4.906	4.906
	Performance (A2/W35) *2	Capacity	Heating	W	9800	11200	12500
		COP		W/W	3.28	3.25	3.14
	Performance (A-7/W35) *3	Capacity	Heating	W	10,300	11,800	13,400
		COP		W/W	2.57	2.55	2.50
	Field Wiring	MCA		A	28	30	32
		MFA		A	35	37.5	40
	Water Connections	Water Flow Rate (Heating / Cooling)		LPM	35/35	40/40	46/44
		Water Pressure (Max)		bar	3	3	3
		Water Pipe	Inlet	Φ, inch	BSPP male 1 1/4"	BSPP male 1 1/4"	BSPP male 1 1/4"
			Outlet	Φ, inch	BSPP male 1 1/4"	BSPP male 1 1/4"	BSPP male 1 1/4"
		Leaving Water Temperature	Heating	°C	25~55	25~55	25~55
			Cooling	°C	5~25	5~25	5~25
	Refrigerant Connections	Liquid Pipe		Φ, mm	9.52	9.52	9.52
				Φ, inch	3/8"	3/8"	3/8"
		Gas Pipe		Φ, mm	15.88	15.88	15.88
				Φ, inch	5/8"	5/8"	5/8"
		Installation Limitation	Max. Length	m	50	50	50
			Max. Height	m	30	30	30
		Chargeless Length		m	15	15	15
	Operating Temp. Range	Heating (A2W) *4		℃	-25~35	-25~35	-25~35
		Cooling (A2W)		℃	10~46	10~46	10~46
		DHW (A2W) *5		℃	-25~43	-25~43	-25~43

*1) A2W Condition #1 : (Heating) Water In/Out 30℃/35℃, Outdoor Air 7℃DB/6℃WB; (Cooling) Water In/Out 23℃/18℃, Outdoor Air 35℃DB.
*2) A2W Condition #2 : (Heating) Water In/Out 30℃/35℃, Outdoor Air 2℃DB
*3) A2W Condition #3 : (Heating) Water In/Out 30℃/35℃, Outdoor Air -7℃DB
*4) The system is operated in (-25℃ ≤ Outdoor temp <-20℃) condition, but no guarantee of capacity.
*5) The system is operated by only Booster Heater in special condition(35℃ < Outdoor temp. ≤ 43℃).

3. System Specification

Model Name		Indoor Unit			AE090JNYDGH/EU	AE160JNYDGH/EU	AE160JNYDGH/EU
		Outdoor Unit			AE090JXEDGH/EU	AE120JXEDGH/EU	AE140JXEDGH/EU
System	Mode			-	Heat Pump (A2W)	Heat Pump (A2W)	Heat Pump (A2W)
	Performance (A7/W35) *1	Nominal Capacity	Heating	W	9,000	12,000	14,000
				Btu/h	30,700	40,900	47,800
			Cooling	W	7,500	12,000	14,000
				Btu/h	25,600	40,900	47,800
		Power Input (Nominal)	Heating	W	2,010	2,590	3,150
			Cooling		2060	3100	3800
		Current Input (Nominal)	Heating	A	3.3	4.1	4.7
			Cooling		3.4	4.7	5.7
		COP (Nominal Heating)		W/W	4.48	4.63	4.44
		EER (Nominal Cooling)		W/W	3.64	3.87	3.68
		SCOP			4.569	4.717	4.733
		ESEER			4.648	4.933	4.906
	Performance (A2/W35) *2	Capacity	Heating	W	7700	9800	11200
		COP		W/W	3.38	3.28	3.25
	Performance (A-7/W35) *3	Capacity	Heating	W	7600	10,300	11,800
		COP		W/W	2.45	2.57	2.55
	Field Wiring	MCA		A	10	10	11
		MFA		A	16.1	16.1	16.1
	Water Connections	Water Flow Rate (Heating / Cooling)		LPM	26/22	35/35	40/40
		Water Pressure (Max)		bar	3	3	3
		Water Pipe	Inlet	Φ, inch	BSPP male 1 1/4"	BSPP male 1 1/4"	BSPP male 1 1/4"
			Outlet	Φ, inch	BSPP male 1 1/4"	BSPP male 1 1/4"	BSPP male 1 1/4"
		Leaving Water Temperature	Heating	°C	25~55	25~55	25~55
			Cooling	°C	5~25	5~25	5~25
	Refrigerant Connections	Liquid Pipe		Φ, mm	6.35	9.52	9.52
				Φ, inch	1/4"	3/8"	3/8"
		Gas Pipe		Φ, mm	15.88	15.88	15.88
				Φ, inch	5/8"	5/8"	5/8"
		Installation Limitation	Max. Length	m	50	50	50
			Max. Height	m	30	30	30
		Chargeless Length		m	15	15	15
	Operating Temp. Range	Heating (A2W) *4		℃	-25~35	-25~35	-25~35
		Cooling (A2W)		℃	10~46	10~46	10~46
		DHW (A2W) *5		℃	-25~43	-25~43	-25~43

*1) A2W Condition #1 : (Heating) Water In/Out 30℃/35℃, Outdoor Air 7℃DB/6℃WB; (Cooling) Water In/Out 23℃/18℃, Outdoor Air 35℃DB.
*2) A2W Condition #2 : (Heating) Water In/Out 30℃/35℃, Outdoor Air 2℃DB
*3) A2W Condition #3 : (Heating) Water In/Out 30℃/35℃, Outdoor Air -7℃DB
*4) The system is operated in (-25℃ ≤ Outdoor temp <-20℃) condition, but no guarantee of capacity.
*5) The system is operated by only Booster Heater in special condition(35℃ < Outdoor temp. ≤ 43℃).

3. System Specification

Model Name		Indoor Unit			AE160JNYDGH/EU
		Outdoor Unit			AE160JXEDGH/EU
System	Mode			-	Heat Pump (A2W)
	Performance (A7/W35) *1	Nominal Capacity	Heating	W	16,000
				Btu/h	54,600
			Cooling	W	15,000
				Btu/h	51,200
		Power Input (Nominal)	Heating	W	3,760
			Cooling		4140
		Current Input (Nominal)	Heating	A	5.7
			Cooling		6.2
		COP (Nominal Heating)		W/W	4.26
		EER (Nominal Cooling)		W/W	3.62
		SCOP			4.697
		ESEER			4.906
	Performance (A2/W35) *2	Capacity	Heating	W	12500
		COP		W/W	3.14
	Performance (A-7/W35) *3	Capacity	Heating	W	13,400
		COP		W/W	2.50
	Field Wiring	MCA		A	12
		MFA		A	16.1
	Water Connections	Water Flow Rate (Heating / Cooling)		LPM	46/44
		Water Pressure (Max)		bar	3
		Water Pipe	Inlet	Φ, inch	BSPP male 1 1/4"
			Outlet	Φ, inch	BSPP male 1 1/4"
		Leaving Water Temperature	Heating	°C	25~55
			Cooling	°C	5~25
	Refrigerant Connections	Liquid Pipe		Φ, mm	9.52
				Φ, inch	3/8"
		Gas Pipe		Φ, mm	15.88
				Φ, inch	5/8"
		Installation Limitation	Max. Length	m	50
			Max. Height	m	30
		Chargeless Length		m	15
	Operating Temp. Range	Heating (A2W) *4		℃	-25~35
		Cooling (A2W)		℃	10~46
		DHW (A2W) *5		℃	-25~43

*1) A2W Condition #1 : (Heating) Water In/Out 30℃/35℃, Outdoor Air 7℃DB/6℃WB; (Cooling) Water In/Out 23℃/18℃, Outdoor Air 35℃DB.
*2) A2W Condition #2 : (Heating) Water In/Out 30℃/35℃, Outdoor Air 2℃DB
*3) A2W Condition #3 : (Heating) Water In/Out 30℃/35℃, Outdoor Air -7℃DB
*4) The system is operated in (-25℃ ≤ Outdoor temp <-20℃) condition, but no guarantee of capacity.
*5) The system is operated by only Booster Heater in special condition(35℃ < Outdoor temp. ≤ 43℃).

II. Outdoor Unit

1. Specifications 12
2. Capacity Tables 16
3. Capacity Correction 19
4. Dimensional Drawings 20
5. Cycle Diagrams 23
6. Wiring Diagrams 25
7. Electric Specifications 28
8. Sound Pressure Level 29
9. Operation Range 32

1. Specifications

1-1. Outdoor Unit (1Φ)

Model Name		Outdoor Unit			AE040JXEDEH/EU	AE060JXEDEH/EU	AE090JXEDEH/EU
Outdoor Unit	Power Supply			Φ, #, V, Hz	220~240V, 50Hz, 1Φ	220~240V, 50Hz, 1Φ	220~240V, 50Hz, 1Φ
	Compressor	Type		-	BLDC Twin Rotary	BLDC Twin Rotary	BLDC Twin Rotary
		Model		-	UG4TH8200FE4SG	UG4TH8200FE4SG	UG8TH8265FJW
		Oil Type		-	POE	POE	POE
	Condenser	Size		-	2RX28S	2RX28S	2RX46S
	Motor	Type (Model)		-	SIC-67FV-F135-2	SIC-67FV-F135-2	FMDC531SSA
		Quantity		EA	1	1	1
		CODE No		-	DB31-00492A	DB31-00492A	DB31-00579A
	Fan	Air Flow Rate	Cooling	CMM	40	43	53
		Number of Unit		EA	1	1	1
	4-Way Valve	Type (Model)			SHF-7H-34U	SHF-7H-34U	SHF-11H
	Base Heater	Power Input		W	X	X	150
	Sound *1	Sound Pressure	Heating	dB(A)	46	47	49
			Cooling	dB(A)	46	47	50
		Sound Power	Heating	dB(A)	61	61	64
			Cooling	dB(A)	63	63	63
	External Dimension	Net Weight		kg	48.5	48.5	68.0
		Shipping Weight		kg	51.5	51.5	78.0
		Net Dimensions (WxHxD)		mm	880 x 638 x 310	880 x 638 x 310	940 x 998 x 330
		Shipping Dimensions (WxHxD)		mm	1,023 x 725 x 413	1,023 x 725 x 413	995 x 1,178 x 426
	Refrigerant	Type		-	R410A (GWP > 150)	R410A (GWP > 150)	R410A (GWP > 150)
		Control Method		-	EEV	EEV	EEV
		Factory Charging		g	1,400	1,400	1,700

*1) Sound level was acquired in an anechoic room. Thus actual noise level may be different depending on the installation conditions.

1. Specifications

1-1. Outdoor Unit (1Φ)

Model Name		Outdoor Unit			AE120JXEDEH/EU	AE140JXEDEH/EU	AE160JXEDEH/EU
Outdoor Unit	Power Supply			Φ, #, V, Hz	220~240V, 50Hz, 1Φ	220~240V, 50Hz, 1Φ	220~240V, 50Hz, 1Φ
	Compressor	Type		-	BLDC Twin Rotary	BLDC Twin Rotary	BLDC Twin Rotary
		Model		-	UG5T450FUEJX	UG5T450FUEJX	UG5T450FUEJX
		Oil Type		-	PVE	PVE	PVE
	Condenser	Size		-	2RX66S	2RX66S	2RX66S
	Motor	Type (Model)		-	FMDC531SSA	FMDC531SSA	FMDC531SSA
		Quantity		EA	2	2	2
		CODE No		-	DB31-00579A	DB31-00579A	DB31-00579A
	Fan	Air Flow Rate	Cooling	CMM	108	108	108
		Number of Unit		EA	2	2	2
	4-Way Valve	Type (Model)			SHF-20D-46	SHF-20D-46	SHF-20D-46
	Base Heater	Power Input		W	150	150	150
	Sound *1	Sound Pressure	Heating	dB(A)	50	50	52
			Cooling	dB(A)	50	52	54
		Sound Power	Heating	dB(A)	64	64	66
			Cooling	dB(A)	64	66	69
	External Dimension	Net Weight		kg	100.0	100.0	100.0
		Shipping Weight		kg	109.5	109.5	109.5
		Net Dimensions (WxHxD)		mm	940 x 1,420 x 330	940 x 1,420 x 330	940 x 1,420 x 330
		Shipping Dimensions (WxHxD)		mm	995 x 1,598 x 426	995 x 1,598 x 426	995 x 1,598 x 426
	Refrigerant	Type		-	R410A (GWP > 150)	R410A (GWP > 150)	R410A (GWP > 150)
		Control Method		-	EEV	EEV	EEV
		Factory Charging		g	2,980	2,980	2,980

*1) Sound level was acquired in an anechoic room. Thus actual noise level may be different depending on the installation conditions.

1. Specifications

1-2. Outdoor Unit (3Φ)

Model Name		Outdoor Unit			AE090JXEDGH/EU	AE120JXEDGH/EU
Outdoor Unit	Power Supply			Φ, #, V, Hz	380~4150V, 50Hz, 3Φ	380~4150V, 50Hz, 3Φ
	Compressor	Type		-	BLDC Twin Rotary	BLDC Twin Rotary
		Model		-	UG8T300FUCJU	UG5T450FUFJX
		Oil Type		-	PVE	PVE
	Condenser	Size		-	2RX46S	2RX66S
	Motor	Type (Model)		-	FMDC531SSA	FMDC531SSA
		Quantity		EA	1	2
		CODE No		-	DB31-00579A	DB31-00579A
	Fan	Air Flow Rate	Cooling	CMM	53	108
		Number of Unit		EA	1	2
	4-Way Valve	Type (Model)			SHF-11H	SHF-20D-46
	Base Heater	Power Input		W	150	150
	Sound *	Sound Pressure	Heating	dB(A)	49	50
			Cooling	dB(A)	50	50
		Sound Power	Heating	dB(A)	64	64
			Cooling	dB(A)	63	64
	External Dimension	Net Weight		kg	76.0	101.5
		Shipping Weight		kg	84.5	111.0
		Net Dimensions (WxHxD)		mm	940 x 998 x 330	940 x 1,420 x 330
		Shipping Dimensions (WxHxD)		mm	995 x 1,178 x 426	995 x 1,598 x 426
	Refrigerant	Type		-	R410A (GWP > 150)	R410A (GWP > 150)
		Control Method		-	EEV	EEV
		Factory Charging		g	1,900	2,980

*1) Sound level was acquired in an anechoic room. Thus actual noise level may be different depending on the installation conditions.

1. Specifications

1-2. Outdoor Unit (3Φ)

Model Name		Outdoor Unit			AE140JXEDGH/EU	AE160JXEDGH/EU
Outdoor Unit	Power Supply			Φ, #, V, Hz	380~4150V, 50Hz, 3Φ	380~4150V, 50Hz, 3Φ
	Compressor	Type		-	BLDC Twin Rotary	BLDC Twin Rotary
		Model		-	UG5T450FUFJX	UG5T450FUFJX
		Oil Type		-	PVE	PVE
	Condenser	Size		-	2RX66S	2RX66S
	Motor	Type (Model)		-	FMDC531SSA	FMDC531SSA
		Quantity		EA	2	2
		CODE No		-	DB31-00579A	DB31-00579A
	Fan	Air Flow Rate	Cooling	CMM	108	108
		Number of Unit		EA	2	2
	4-Way Valve	Type (Model)			SHF-20D-46	SHF-20D-46
	Base Heater	Power Input		W	150	150
	Sound *1	Sound Pressure	Heating	dB(A)	50	52
			Cooling	dB(A)	52	54
		Sound Power	Heating	dB(A)	64	66
			Cooling	dB(A)	66	69
	External Dimension	Net Weight		kg	101.5	101.5
		Shipping Weight		kg	111.0	111.0
		Net Dimensions (WxHxD)		mm	940 x 1,420 x 330	940 x 1,420 x 330
		Shipping Dimensions (WxHxD)		mm	995 x 1,598 x 426	995 x 1,598 x 426
	Refrigerant	Type		-	R410A (GWP > 150)	R410A (GWP > 150)
		Control Method		-	EEV	EEV
		Factory Charging		g	2,980	2,980

*1) Sound level was acquired in an anechoic room. Thus actual noise level may be different depending on the installation conditions.

2. Capacity Tables

2-1. AE040/060/090/120/140/160JXED*H/EU

1) Maximum Heating Capacity (Peak Value)

LWT (Leaving Water Temp.), Tamb (Ambient Temp.), HC (Heating Capacity), PI (Power input)

	LWT (℃)	25		30		35		40		45		50		55	
AE040JXEDEH/EU	Tamb (℃)	HC(kW)	PI(kW)	HC(kW)	PI(kW)	HC(kW)	PI(kW)	HC(kW)	PI(kW)	HC(kW)	PI(kW)	HC(kW)	PI(kW)	HC(kW)	PI(kW)
	-20	3.35	1.02	3.39	1.30	3.43	1.59	3.48	1.88						
	-15	3.65	1.02	3.69	1.30	3.74	1.59	3.80	1.88	3.86	2.18				
	-10	3.82	1.00	3.93	1.28	5.51	1.56	4.19	1.85	4.33	2.14	4.50	2.44	4.68	2.74
	-7	3.92	0.99	4.07	1.27	4.24	1.55	4.42	1.83	4.62	2.12	4.83	2.41	5.08	2.71
	-2	4.18	0.86	4.32	1.11	4.47	1.36	4.63	1.62	4.80	1.88	4.99	2.14	5.20	2.40
	2	4.29	0.71	4.41	0.92	4.53	1.14	4.67	1.36	4.82	1.59	4.98	1.81	5.15	2.04
	7	4.60	0.52	4.50	0.69	4.40	0.86	4.30	1.03	4.20	1.20	4.10	1.37	4.00	1.54
	10	4.73	0.53	4.64	0.70	4.56	0.87	4.47	1.05	4.38	1.22	4.30	1.39	4.21	1.56
	15	4.95	0.55	4.89	0.72	4.82	0.90	4.75	1.07	4.69	1.24	4.62	1.42	4.56	1.59
	20	5.17	0.57	5.13	0.75	5.08	0.92	5.04	1.10	4.99	1.27	4.95	1.44	4.90	1.62
AE060JXEDEH/EU	LWT (℃)	25		30		35		40		45		50		55	
	Tamb (℃)	HC(kW)	PI(kW)	HC(kW)	PI(kW)	HC(kW)	PI(kW)	HC(kW)	PI(kW)	HC(kW)	PI(kW)	HC(kW)	PI(kW)	HC(kW)	PI(kW)
	-20	4.82	1.74	4.74	2.00	4.66	2.27	4.59	2.54						
	-15	5.22	1.74	5.15	2.00	5.09	2.27	5.02	2.54	4.97	2.81				
	-10	5.49	1.71	5.49	1.97	5.51	2.24	5.54	2.50	5.57	2.77	5.62	3.04	5.69	3.31
	-7	5.64	1.69	5.70	1.95	5.77	2.21	5.84	2.48	5.94	2.74	6.05	3.01	6.17	3.27
	-2	5.99	1.49	6.02	1.72	6.06	1.95	6.11	2.19	6.17	2.42	6.25	2.66	6.33	2.90
	2	6.10	1.24	6.11	1.44	6.13	1.64	6.16	1.85	6.19	2.05	6.24	2.26	6.29	2.46
	7	6.60	0.95	6.30	1.10	6.00	1.25	5.70	1.40	5.40	1.55	5.10	1.70	4.80	1.85
	10	6.79	0.97	6.50	1.12	6.21	1.27	5.92	1.42	5.64	1.57	5.35	1.72	5.06	1.87
	15	7.12	1.00	6.85	1.15	6.57	1.30	6.30	1.45	6.03	1.61	5.75	1.76	5.48	1.91
	20	7.44	1.04	7.19	1.19	6.93	1.34	6.67	1.49	6.42	1.64	6.16	1.79	5.91	1.94
AE090JXED*H/EU	LWT (℃)	25		30		35		40		45		50		55	
	Tamb (℃)	HC(kW)	PI(kW)	HC(kW)	PI(kW)	HC(kW)	PI(kW)	HC(kW)	PI(kW)	HC(kW)	PI(kW)	HC(kW)	PI(kW)	HC(kW)	PI(kW)
	-20	7.16	2.76	6.99	3.10	6.83	3.44	6.66	3.78						
	-15	7.81	2.76	7.66	3.10	7.51	3.44	7.36	3.78	7.21	4.13				
	-10	8.26	2.71	8.22	3.05	9.33	3.39	8.16	3.72	8.15	4.06	8.16	4.40	8.18	5.10
	-7	8.52	2.69	8.55	3.02	8.59	3.35	8.65	3.68	8.72	4.02	8.81	4.35	8.93	5.10
	-2	9.67	2.49	9.61	2.77	9.56	3.05	9.52	3.34	9.49	3.62	9.48	3.90	9.48	4.18
	2	10.55	2.24	10.41	2.47	10.27	2.69	10.13	2.92	10.01	3.15	9.89	3.37	9.78	3.60
	7	9.40	1.52	9.20	1.77	9.00	2.01	8.80	2.26	8.60	2.50	8.40	2.75	8.20	2.99
	10	9.94	1.59	9.74	1.84	9.54	2.08	9.34	2.33	9.14	2.57	8.94	2.82	8.75	3.06
	15	10.83	1.71	10.64	1.95	10.44	2.20	10.24	2.45	10.05	2.69	9.85	2.94	9.66	3.18
	20	11.73	1.83	11.53	2.07	11.34	2.32	11.15	2.56	10.95	2.81	10.76	3.06	10.57	3.30
AE120JXED*H/EU	LWT (℃)	25		30		35		40		45		50		55	
	Tamb (℃)	HC(kW)	PI(kW)	HC(kW)	PI(kW)	HC(kW)	PI(kW)	HC(kW)	PI(kW)	HC(kW)	PI(kW)	HC(kW)	PI(kW)	HC(kW)	PI(kW)
	-20	9.84	3.38	9.55	3.91	9.26	4.45	8.96	4.99						
	-15	10.73	3.38	10.45	3.91	10.17	4.45	9.90	4.99	9.63	5.53				
	-10	11.27	3.33	11.17	3.85	11.25	4.37	11.02	4.90	10.97	5.44	10.93	5.97	10.92	6.48
	-7	11.59	3.30	11.61	3.81	11.64	4.33	11.70	4.85	11.77	5.38	11.87	5.91	12.01	6.44
	-2	12.55	3.02	12.55	3.50	12.56	3.97	12.59	4.45	12.64	4.93	12.71	5.42	12.81	5.90
	2	13.06	2.68	13.06	3.11	13.07	3.53	13.09	3.96	13.13	4.39	13.18	4.83	13.26	5.26
	7	12.50	1.95	12.25	2.27	12.00	2.59	11.75	2.91	11.50	3.23	11.25	3.55	11.00	3.87
	10	13.05	1.97	12.81	2.29	12.58	2.61	12.34	2.93	12.10	3.25	11.86	3.57	11.62	3.89
	15	13.97	2.00	13.75	2.32	13.54	2.64	13.32	2.96	13.10	3.29	12.88	3.61	12.66	3.93
	20	14.89	2.03	14.69	2.35	14.50	2.68	14.30	3.00	14.10	3.32	13.90	3.64	13.70	3.96
AE140JXED*H/EU	LWT (℃)	25		30		35		40		45		50		55	
	Tamb (℃)	HC(kW)	PI(kW)	HC(kW)	PI(kW)	HC(kW)	PI(kW)	HC(kW)	PI(kW)	HC(kW)	PI(kW)	HC(kW)	PI(kW)	HC(kW)	PI(kW)
	-20	11.44	4.07	11.02	4.60	10.58	5.13	10.15	5.66						
	-15	12.46	4.07	12.05	4.60	11.64	5.13	11.23	5.66	10.82	6.20				
	-10	13.14	4.01	12.92	4.53	12.60	5.05	12.50	5.57	12.31	6.10	12.13	6.62	11.96	6.94
	-7	13.54	3.97	13.43	4.48	13.34	5.00	13.26	5.52	13.20	6.04	13.16	6.56	13.14	6.94
	-2	14.66	3.64	14.51	4.11	14.37	4.58	14.25	5.06	14.14	5.53	14.04	6.01	13.97	6.48
	2	15.26	3.23	15.09	3.65	14.93	4.07	14.78	4.50	14.64	4.92	14.52	5.35	14.41	5.78
	7	15.00	2.55	14.50	2.85	14.00	3.15	13.50	3.45	13.00	3.75	12.50	4.05	12.00	4.35
	10	15.69	2.57	15.19	2.87	14.69	3.17	14.19	3.47	13.69	3.77	13.19	4.07	12.69	4.37
	15	16.85	2.61	16.35	2.91	15.85	3.21	15.35	3.51	14.85	3.81	14.35	4.11	13.85	4.41
	20	18.00	2.64	17.50	2.94	17.00	3.24	16.50	3.54	16.00	3.84	15.50	4.14	15.00	4.44
AE160JXED*H/EU	LWT (℃)	25		30		35		40		45		50		55	
	Tamb (℃)	HC(kW)	PI(kW)	HC(kW)	PI(kW)	HC(kW)	PI(kW)	HC(kW)	PI(kW)	HC(kW)	PI(kW)	HC(kW)	PI(kW)	HC(kW)	PI(kW)
	-20	12.82	4.73	12.42	5.34	12.03	5.95	11.63	6.57						
	-15	13.97	4.73	13.60	5.34	13.23	5.95	12.86	6.57	12.49	7.18				
	-10	14.75	4.64	14.58	5.25	14.40	5.85	14.28	6.46	14.16	7.07	14.05	7.40	13.96	7.40
	-7	15.23	4.59	15.18	5.19	15.15	5.79	15.14	6.39	15.15	7.00	15.20	7.61	15.28	7.40
	-2	16.30	4.22	16.23	4.76	16.18	5.30	16.15	5.85	16.14	6.40	16.16	6.95	16.20	7.50
	2	16.77	3.74	16.71	4.22	16.67	4.71	16.64	5.19	16.63	5.68	16.64	6.16	16.68	6.65
	7	16.70	2.98	16.35	3.37	16.00	3.76	15.65	4.15	15.30	4.54	14.95	4.93	14.60	5.32
	10	17.58	3.00	17.24	3.39	16.90	3.78	16.56	4.17	16.22	4.56	15.88	4.95	15.54	5.34
	15	19.05	3.03	18.73	3.42	18.40	3.82	18.07	4.21	17.75	4.60	17.42	4.99	17.10	5.38
	20	20.52	3.07	20.21	3.46	19.90	3.85	19.59	4.24	19.28	4.63	18.97	5.02	18.66	5.41

1. Heating capacity : Capacity is according to Eurovent rating standard OM-3-2015 and valid for heated water range △t = 3～8°C
2. Cooling capacity : Capacity is according to Eurovent rating standard OM-3-2015 and valid for chilled water range △t = 3～8°C
3. Power input : Power input is according to Eurovent rating standard OM-3-2015.
4. Peak value : Tested without defrost operation in accordance with EN14511

※ The real capacity would be changed according to the install environment.

2. Capacity Tables

2-1. AE040/060/090/120/140/160JXED*H/EU

2) Maximum Heating Capacity (Integrated Value)

LWT (Leaving Water Temp.), Tamb (Ambient Temp.), HC (Heating Capacity), PI (Power input)

	LWT (℃)	25		30		35		40		45		50		55	
AE040JXEDEH/EU	Tamb (℃)	HC(kW)	PI(kW)	HC(kW)	PI(kW)	HC(kW)	PI(kW)	HC(kW)	PI(kW)	HC(kW)	PI(kW)	HC(kW)	PI(kW)	HC(kW)	PI(kW)
	-20	3.09	0.98	3.06	1.22	3.03	1.47	3.00	1.71						
	-15	3.37	0.98	3.34	1.22	3.31	1.47	3.28	1.71	3.25	1.96				
	-10	3.52	0.96	3.55	1.21	3.58	1.45	3.61	1.69	3.65	1.93	3.68	2.17	3.71	2.41
	-7	3.62	0.96	3.68	1.19	3.75	1.43	3.82	1.67	3.88	1.91	3.95	2.15	4.02	2.38
	-2	3.47	0.79	3.52	0.99	3.58	1.20	3.63	1.41	3.68	1.61	3.74	1.82	3.79	2.02
	2	3.31	0.62	3.36	0.79	3.40	0.97	3.44	1.14	3.49	1.32	3.53	1.49	3.57	1.67
	7	4.60	0.52	4.50	0.69	4.40	0.86	4.30	1.03	4.20	1.20	4.10	1.37	4.00	1.54
	10	4.73	0.53	4.64	0.70	4.56	0.87	4.47	1.05	4.38	1.22	4.30	1.39	4.21	1.56
	15	4.95	0.55	4.89	0.72	4.82	0.90	4.75	1.07	4.69	1.24	4.62	1.42	4.56	1.59
	20	5.17	0.57	5.13	0.75	5.08	0.92	5.04	1.10	4.99	1.27	4.95	1.44	4.90	1.62
AE060JXEDEH/EU	LWT (℃)	25		30		35		40		45		50		55	
	Tamb (℃)	HC(kW)	PI(kW)	HC(kW)	PI(kW)	HC(kW)	PI(kW)	HC(kW)	PI(kW)	HC(kW)	PI(kW)	HC(kW)	PI(kW)	HC(kW)	PI(kW)
	-20	4.45	1.68	4.29	1.89	4.13	2.10	3.96	2.32						
	-15	4.82	1.68	4.66	1.89	4.50	2.10	4.34	2.32	4.18	2.53				
	-10	5.06	1.65	4.97	1.86	4.88	2.07	4.78	2.28	4.69	2.49	4.59	2.70	4.50	2.91
	-7	5.21	1.63	5.15	1.84	5.10	2.05	5.05	2.26	4.99	2.46	4.94	2.67	4.88	2.88
	-2	4.96	1.36	4.91	1.54	4.85	1.72	4.79	1.90	4.74	2.08	4.68	2.26	4.63	2.44
	2	4.72	1.08	4.66	1.23	4.60	1.39	4.54	1.54	4.48	1.70	4.42	1.86	4.37	2.01
	7	6.60	0.95	6.30	1.10	6.00	1.25	5.70	1.40	5.40	1.55	5.10	1.70	4.80	1.85
	10	6.79	0.97	6.50	1.12	6.21	1.27	5.92	1.42	5.64	1.57	5.35	1.72	5.06	1.87
	15	7.12	1.00	6.85	1.15	6.57	1.30	6.30	1.45	6.03	1.61	5.75	1.76	5.48	1.91
	20	7.44	1.04	7.19	1.19	6.93	1.34	6.67	1.49	6.42	1.64	6.16	1.79	5.91	1.94
AE090JXED*H/EU	LWT (℃)	25		30		35		40		45		50		55	
	Tamb (℃)	HC(kW)	PI(kW)	HC(kW)	PI(kW)	HC(kW)	PI(kW)	HC(kW)	PI(kW)	HC(kW)	PI(kW)	HC(kW)	PI(kW)	HC(kW)	PI(kW)
	-20	6.61	2.66	6.33	2.92	6.04	3.18	5.75	3.45						
	-15	7.21	2.66	6.93	2.92	6.64	3.18	6.35	3.45	6.07	3.71				
	-10	7.62	2.62	7.43	2.88	7.24	3.13	7.05	3.39	6.86	3.65	6.67	3.91	6.48	4.16
	-7	7.87	2.59	7.73	2.85	7.60	3.10	7.47	3.36	7.33	3.61	7.20	3.87	7.07	4.12
	-2	8.01	2.27	7.83	2.48	7.65	2.69	7.47	2.90	7.29	3.11	7.11	3.32	6.92	3.53
	2	8.16	1.95	7.93	2.11	7.70	2.28	7.47	2.44	7.24	2.61	7.01	2.77	6.78	2.94
	7	9.40	1.52	9.20	1.77	9.00	2.01	8.80	2.26	8.60	2.50	8.40	2.75	8.20	2.99
	10	9.94	1.59	9.74	1.84	9.54	2.08	9.34	2.33	9.14	2.57	8.94	2.82	8.75	3.06
	15	10.83	1.71	10.64	1.95	10.44	2.20	10.24	2.45	10.05	2.69	9.85	2.94	9.66	3.18
	20	11.73	1.83	11.53	2.07	11.34	2.32	11.15	2.56	10.95	2.81	10.76	3.06	10.57	3.30
AE120JXED*H/EU	LWT (℃)	25		30		35		40		45		50		55	
	Tamb (℃)	HC(kW)	PI(kW)	HC(kW)	PI(kW)	HC(kW)	PI(kW)	HC(kW)	PI(kW)	HC(kW)	PI(kW)	HC(kW)	PI(kW)	HC(kW)	PI(kW)
	-20	9.09	3.26	8.64	3.69	8.19	4.12	7.74	4.54						
	-15	9.90	3.26	9.45	3.69	9.00	4.12	8.55	4.54	8.10	4.97				
	-10	10.40	3.21	10.11	3.63	9.81	4.05	9.52	4.47	9.23	4.89	8.93	5.31	8.64	5.73
	-7	10.70	3.18	10.50	3.59	10.30	4.01	10.10	4.42	9.90	4.84	9.70	5.25	9.50	5.67
	-2	10.40	2.76	10.23	3.13	10.05	3.50	9.88	3.87	9.70	4.24	9.53	4.61	9.35	4.98
	2	10.10	2.34	9.95	2.66	9.80	2.99	9.65	3.31	9.50	3.64	9.35	3.97	9.20	4.29
	7	12.50	1.95	12.25	2.27	12.00	2.59	11.75	2.91	11.50	3.23	11.25	3.55	11.00	3.87
	10	13.05	1.97	12.81	2.29	12.58	2.61	12.34	2.93	12.10	3.25	11.86	3.57	11.62	3.89
	15	13.97	2.00	13.75	2.32	13.54	2.64	13.32	2.96	13.10	3.29	12.88	3.61	12.66	3.93
	20	14.89	2.03	14.69	2.35	14.50	2.68	14.30	3.00	14.10	3.32	13.90	3.64	13.70	3.96
AE140JXED*H/EU	LWT (℃)	25		30		35		40		45		50		55	
	Tamb (℃)	HC(kW)	PI(kW)	HC(kW)	PI(kW)	HC(kW)	PI(kW)	HC(kW)	PI(kW)	HC(kW)	PI(kW)	HC(kW)	PI(kW)	HC(kW)	PI(kW)
	-20	10.56	3.93	9.96	4.34	9.36	4.75	8.76	5.16						
	-15	11.50	3.93	10.90	4.34	10.30	4.75	9.70	5.16	9.10	5.57				
	-10	12.13	3.87	11.68	4.27	11.24	4.67	10.79	5.08	10.35	5.48	9.91	5.88	9.46	6.29
	-7	12.50	3.83	12.15	4.23	11.80	4.63	11.45	5.03	11.10	5.43	10.75	5.83	10.40	6.23
	-2	12.15	3.32	11.83	3.68	11.50	4.04	11.18	4.40	10.85	4.75	10.53	5.11	10.20	5.47
	2	11.80	2.81	11.50	3.13	11.20	3.45	10.90	3.76	10.60	4.08	10.30	4.40	10.00	4.71
	7	15.00	2.55	14.50	2.85	14.00	3.15	13.50	3.45	13.00	3.75	12.50	4.05	12.00	4.35
	10	15.69	2.57	15.19	2.87	14.69	3.17	14.19	3.47	13.69	3.77	13.19	4.07	12.69	4.37
	15	16.85	2.61	16.35	2.91	15.85	3.21	15.35	3.51	14.85	3.81	14.35	4.11	13.85	4.41
	20	18.00	2.64	17.50	2.94	17.00	3.24	16.50	3.54	16.00	3.84	15.50	4.14	15.00	4.44
AE160JXED*H/EU	LWT (℃)	25		30		35		40		45		50		55	
	Tamb (℃)	HC(kW)	PI(kW)	HC(kW)	PI(kW)	HC(kW)	PI(kW)	HC(kW)	PI(kW)	HC(kW)	PI(kW)	HC(kW)	PI(kW)	HC(kW)	PI(kW)
	-20	11.83	4.56	11.23	5.04	10.64	5.51	10.04	5.98						
	-15	12.89	4.56	12.30	5.04	11.70	5.51	11.10	5.98	10.51	6.46				
	-10	13.62	4.48	13.19	4.95	12.76	5.42	12.33	5.89	11.91	6.35	11.48	6.82	11.05	7.29
	-7	14.06	4.43	13.73	4.89	13.40	5.36	13.07	5.83	12.74	6.29	12.42	6.76	12.09	7.22
	-2	13.51	3.84	13.23	4.26	12.95	4.67	12.67	5.08	12.39	5.50	12.11	5.91	11.83	6.33
	2	12.96	3.26	12.73	3.62	12.50	3.98	12.27	4.34	12.04	4.70	11.80	5.06	11.57	5.43
	7	16.70	2.98	16.35	3.37	16.00	3.76	15.65	4.15	15.30	4.54	14.95	4.93	14.60	5.32
	10	17.58	3.00	17.24	3.39	16.90	3.78	16.56	4.17	16.22	4.56	15.88	4.95	15.54	5.34
	15	19.05	3.03	18.73	3.42	18.40	3.82	18.07	4.21	17.75	4.60	17.42	4.99	17.10	5.38
	20	20.52	3.07	20.21	3.46	19.90	3.85	19.59	4.24	19.28	4.63	18.97	5.02	18.66	5.41

1. Heating capacity : Capacity is according to Eurovent rating standard OM-3-2015 and valid for heated water range △t = 3～8°C
2. Cooling capacity : Capacity is according to Eurovent rating standard OM-3-2015 and valid for chilled water range △t = 3～8°C
3. Power input : Power input is according to Eurovent rating standard OM-3-2015.
4. Integrated value : Tested with defrost operation in accordance with EN14511

※ The real capacity would be changed according to the install environment.

2. Capacity Tables

2-1. AE040/060/090/120/140/160JXED*H/EU

3) Maximum Cooling Capacity

LWT (Leaving Water Temp.), Tamb (Ambient Temp.), CC (Cooling Capacity), PI (Power input)

	LWT (℃)	7		10		13		15		18		26	
AE040JXEDEH/EU	Tamb (℃)	HC(kW)	PI(kW)	HC(kW)	PI(kW)	HC(kW)	PI(kW)	HC(kW)	PI(kW)	HC(kW)	PI(kW)	HC(kW)	PI(kW)
	10	4.42	0.92	4.80	0.94	5.18	0.96	5.43	0.97	5.82	0.98	6.71	1.02
	20	4.09	1.03	4.47	1.05	4.85	1.07	5.11	1.08	5.49	1.09	6.38	1.13
	30	3.76	1.14	4.14	1.16	4.53	1.18	4.78	1.19	5.16	1.20	6.05	1.24
	35	3.60	1.20	3.98	1.22	4.36	1.23	4.62	1.24	5.00	1.26	5.89	1.30
	46	3.24	1.32	3.62	1.34	4.00	1.35	4.26	1.37	4.64	1.38	5.53	1.42
AE060JXEDEH/EU	LWT (℃)	7		10		13		15		18		26	
	Tamb (℃)	HC(kW)	PI(kW)	HC(kW)	PI(kW)	HC(kW)	PI(kW)	HC(kW)	PI(kW)	HC(kW)	PI(kW)	HC(kW)	PI(kW)
	10	5.76	1.35	6.26	1.35	6.75	1.35	7.07	1.35	7.56	1.35	8.71	1.35
	20	5.34	1.51	5.83	1.51	6.32	1.51	6.65	1.51	7.14	1.51	8.28	1.51
	30	4.91	1.67	5.40	1.67	5.89	1.67	6.22	1.67	6.71	1.67	7.86	1.67
	35	4.70	1.75	5.19	1.75	5.68	1.75	6.01	1.75	6.50	1.75	7.65	1.75
	46	4.23	1.93	4.72	1.93	5.21	1.93	5.54	1.93	6.03	1.93	7.18	1.93
AE090JXED*H/EU	LWT (℃)	7		10		13		15		18		25	
	Tamb (℃)	HC(kW)	PI(kW)	HC(kW)	PI(kW)	HC(kW)	PI(kW)	HC(kW)	PI(kW)	HC(kW)	PI(kW)	HC(kW)	PI(kW)
	10	8.41	1.36	9.01	1.37	9.61	1.38	10.01	1.39	10.61	1.41	12.01	1.44
	20	7.37	1.67	7.97	1.69	8.57	1.70	8.97	1.71	9.57	1.72	10.97	1.76
	30	6.32	1.99	6.92	2.00	7.52	2.02	7.92	2.03	8.52	2.04	9.92	2.07
	35	5.80	2.15	6.40	2.16	7.00	2.18	7.40	2.19	8.00	2.20	9.40	2.23
	46	4.65	2.50	5.25	2.51	5.85	2.53	6.25	2.54	6.85	2.55	8.25	2.58
AE120JXED*H/EU	LWT (℃)	7		10		13		15		18		25	
	Tamb (℃)	HC(kW)	PI(kW)	HC(kW)	PI(kW)	HC(kW)	PI(kW)	HC(kW)	PI(kW)	HC(kW)	PI(kW)	HC(kW)	PI(kW)
	10	11.95	1.90	12.77	1.90	13.58	1.90	14.13	1.90	14.95	1.90	16.86	1.90
	20	10.77	2.38	11.59	2.38	12.40	2.38	12.95	2.38	13.77	2.38	15.68	2.38
	30	9.59	2.86	10.41	2.86	11.23	2.86	11.77	2.86	12.59	2.86	14.50	2.86
	35	9.00	3.10	9.82	3.10	10.64	3.10	11.18	3.10	12.00	3.10	13.91	3.10
	46	7.70	3.63	8.52	3.63	9.34	3.63	9.89	3.63	10.70	3.63	12.61	3.63
AE140JXED*H/EU	LWT (℃)	7		10		13		15		18		25	
	Tamb (℃)	HC(kW)	PI(kW)	HC(kW)	PI(kW)	HC(kW)	PI(kW)	HC(kW)	PI(kW)	HC(kW)	PI(kW)	HC(kW)	PI(kW)
	10	14.09	2.39	15.04	2.40	15.99	2.42	16.63	2.43	17.59	2.44	19.81	2.47
	20	12.65	2.93	13.61	2.95	14.56	2.96	15.20	2.97	16.15	2.98	18.38	3.02
	30	11.22	3.48	12.17	3.49	13.13	3.51	13.76	3.51	14.72	3.53	16.94	3.56
	35	10.50	3.75	11.45	3.76	12.41	3.78	13.05	3.79	14.00	3.80	16.23	3.83
	46	8.92	4.35	9.88	4.36	10.83	4.38	11.47	4.38	12.42	4.40	14.65	4.43
AE160JXED*H/EU	LWT (℃)	7		10		13		15		18		25	
	Tamb (℃)	HC(kW)	PI(kW)	HC(kW)	PI(kW)	HC(kW)	PI(kW)	HC(kW)	PI(kW)	HC(kW)	PI(kW)	HC(kW)	PI(kW)
	10	14.74	2.73	15.77	2.77	16.81	2.81	17.50	2.84	18.54	2.87	20.96	2.96
	20	13.32	3.24	14.36	3.28	15.39	3.32	16.09	3.34	17.12	3.38	19.54	3.47
	30	11.91	3.75	12.94	3.79	13.98	3.82	14.67	3.85	15.71	3.89	18.13	3.98
	35	11.20	4.00	12.24	4.04	13.27	4.08	13.96	4.10	15.00	4.14	17.42	4.23
	46	9.64	4.56	10.68	4.59	11.72	4.63	12.41	4.66	13.44	4.70	15.86	4.79

1. Heating capacity is according to Eurovent rating standard OM-3-2015 and valid for heated water range △t = 3～8°C
2. Cooling capacity is according to Eurovent rating standard OM-3-2015 and valid for chilled water range △t = 3～8°C
3. Power input is total of indoor and outdoor unit, according to Eurovent rating standard OM-3-2015.

※ The real capacity would be changed according to the install environment.

3. Capacity Correction

3-1. AE040/060JXEDEH/EU

1) Heating

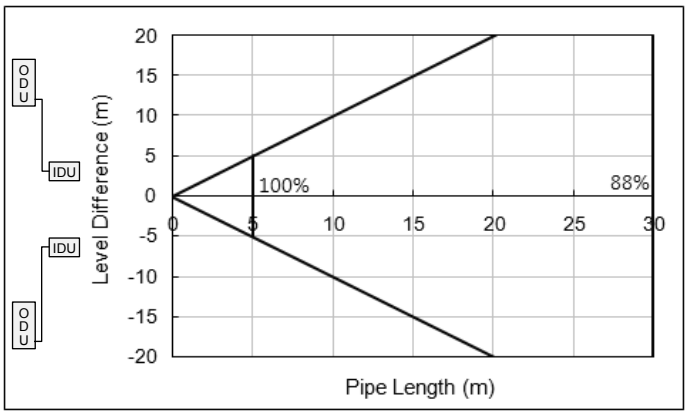

2) Cooling

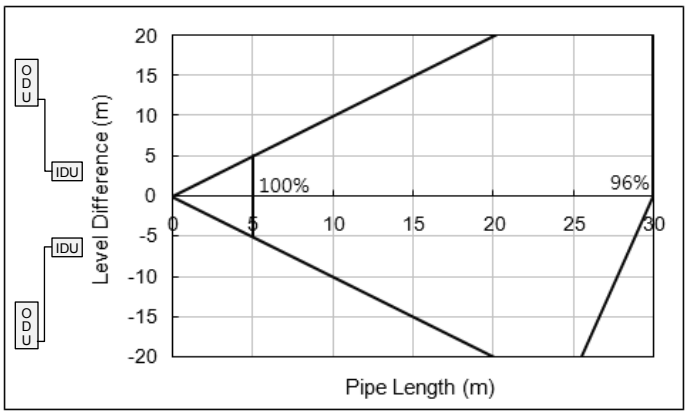

3-2. AE090/120/140/160JXED*H/EU

1) Heating

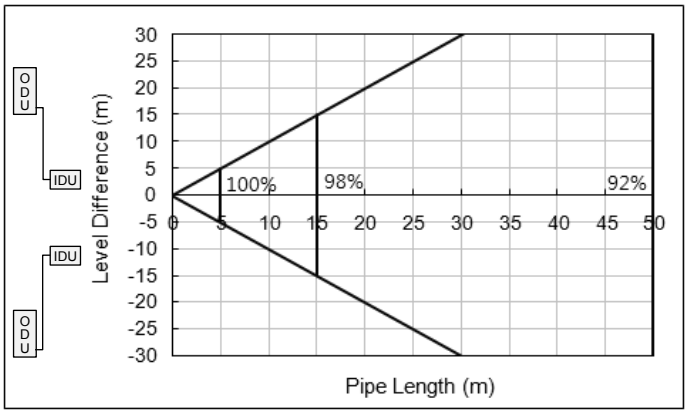

2) Cooling

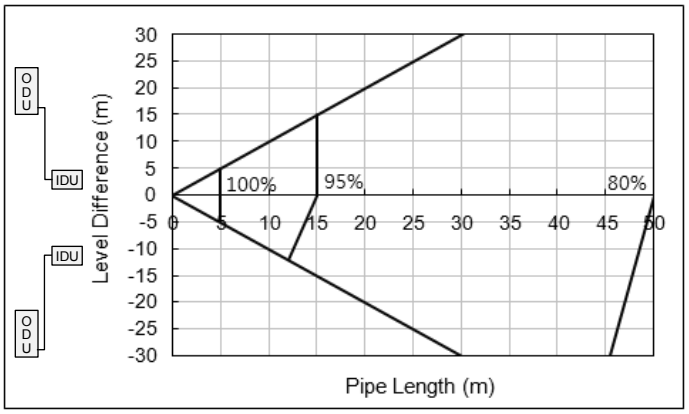

4. Dimensional Drawings

4-1. Outdoor Unit

1) AE040/060JXEDEH/EU

(Unit : mm)

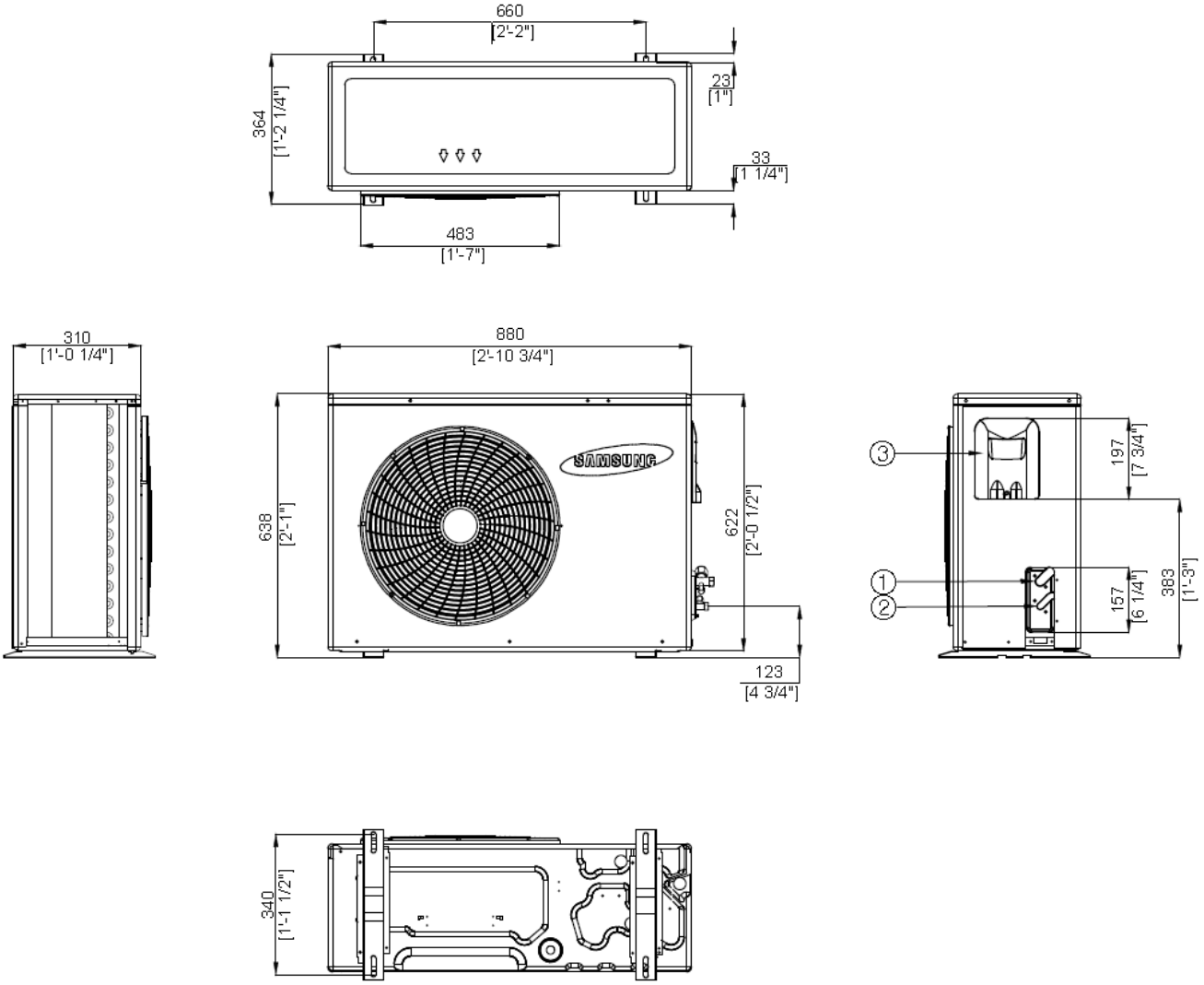

No.	Table of Descriptions
①	Gas Ref. Pipe
②	Liquid Ref. Pipe
③	Power & Communication Wiring Conduits

4. Dimensional Drawings

4-1. Outdoor Unit

2) AE090JXED*H/EU

(Unit : mm)

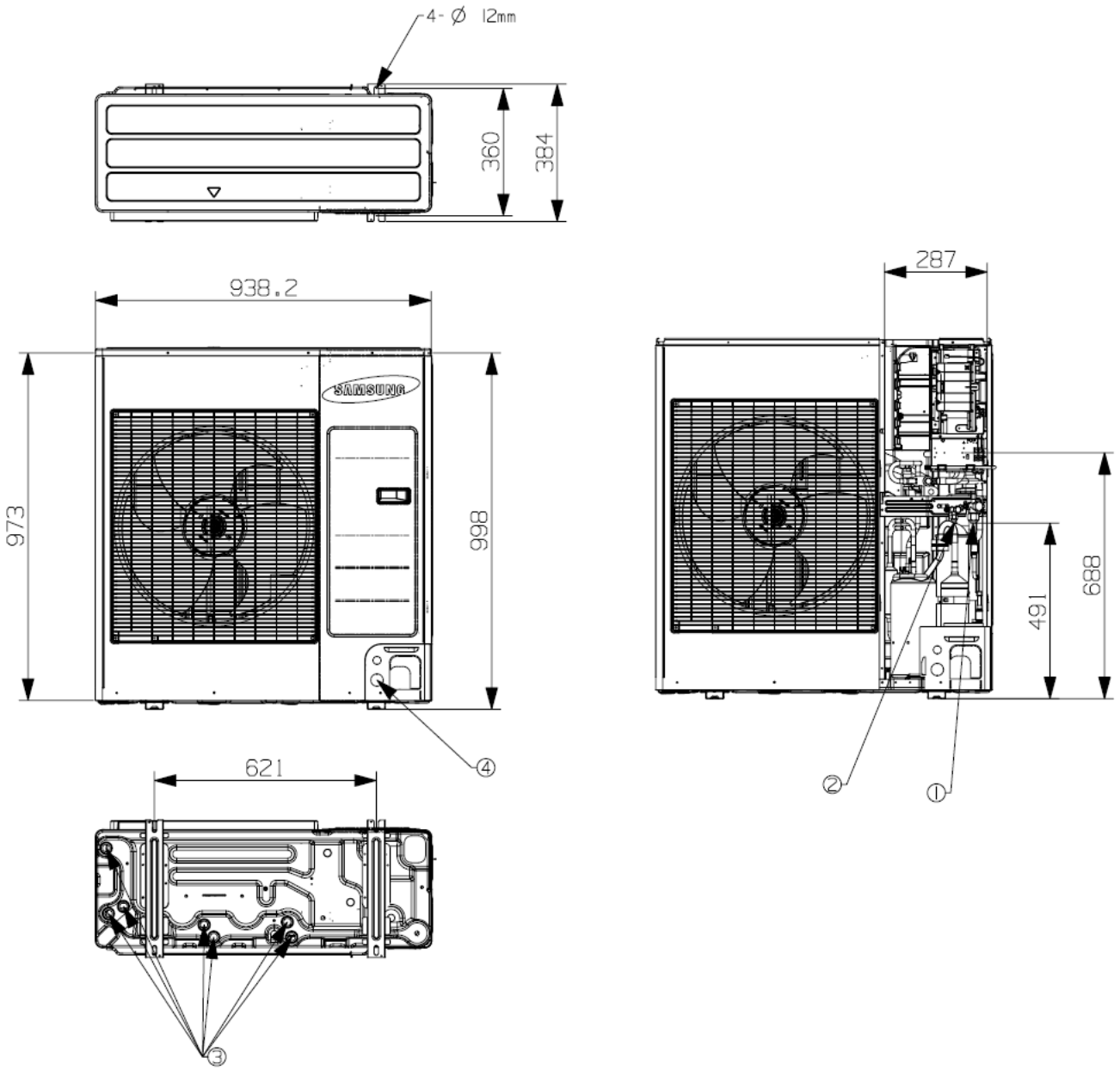

No.	Table of Descriptions
①	Gas Ref. Pipe
②	Liquid Ref. Pipe
③	Drain Hole
④	Power & Communication Wiring Conduits

4. Dimensional Drawings

4-1. Outdoor Unit

3) AE120/140/160JXED*H/EU

(Unit : mm)

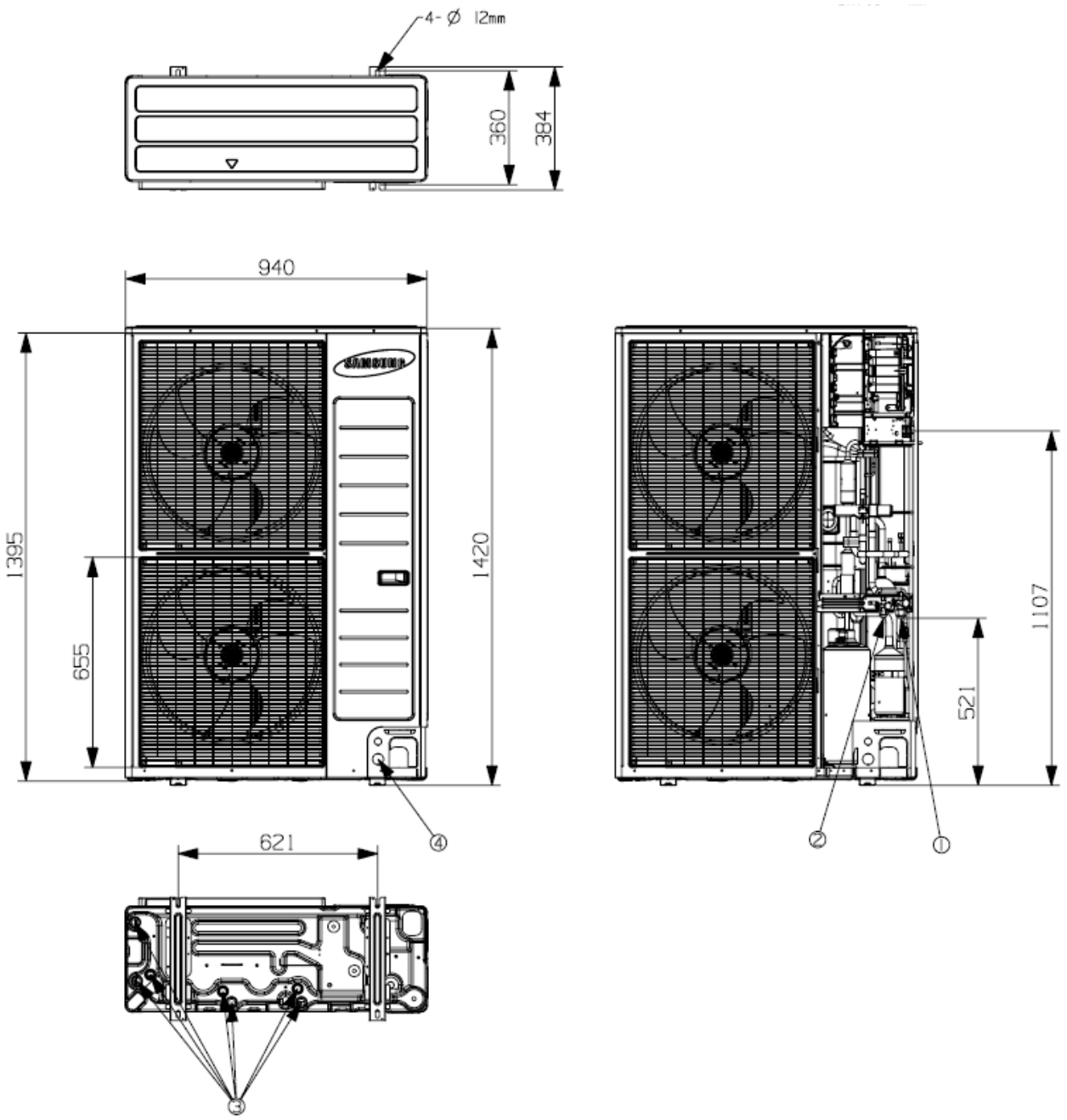

No.	Table of Descriptions
①	Gas Ref. Pipe
②	Liquid Ref. Pipe
③	Drain Hole
④	Power & Communication Wiring Conduits

5. Cycle Diagrams

5-1. Outdoor Unit

1) AE040/060JXEDEH/EU

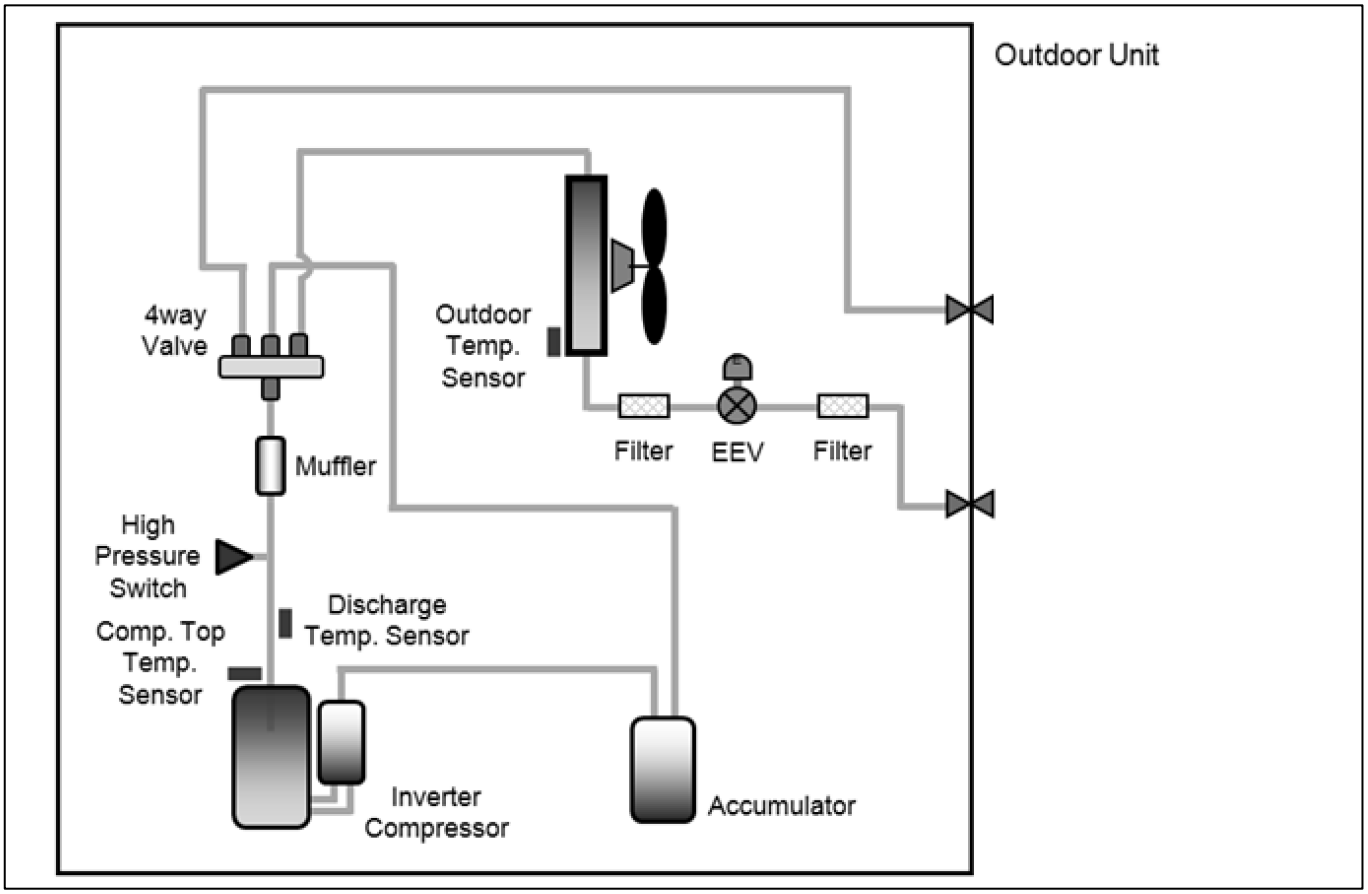

2) AE090JXED*H/EU

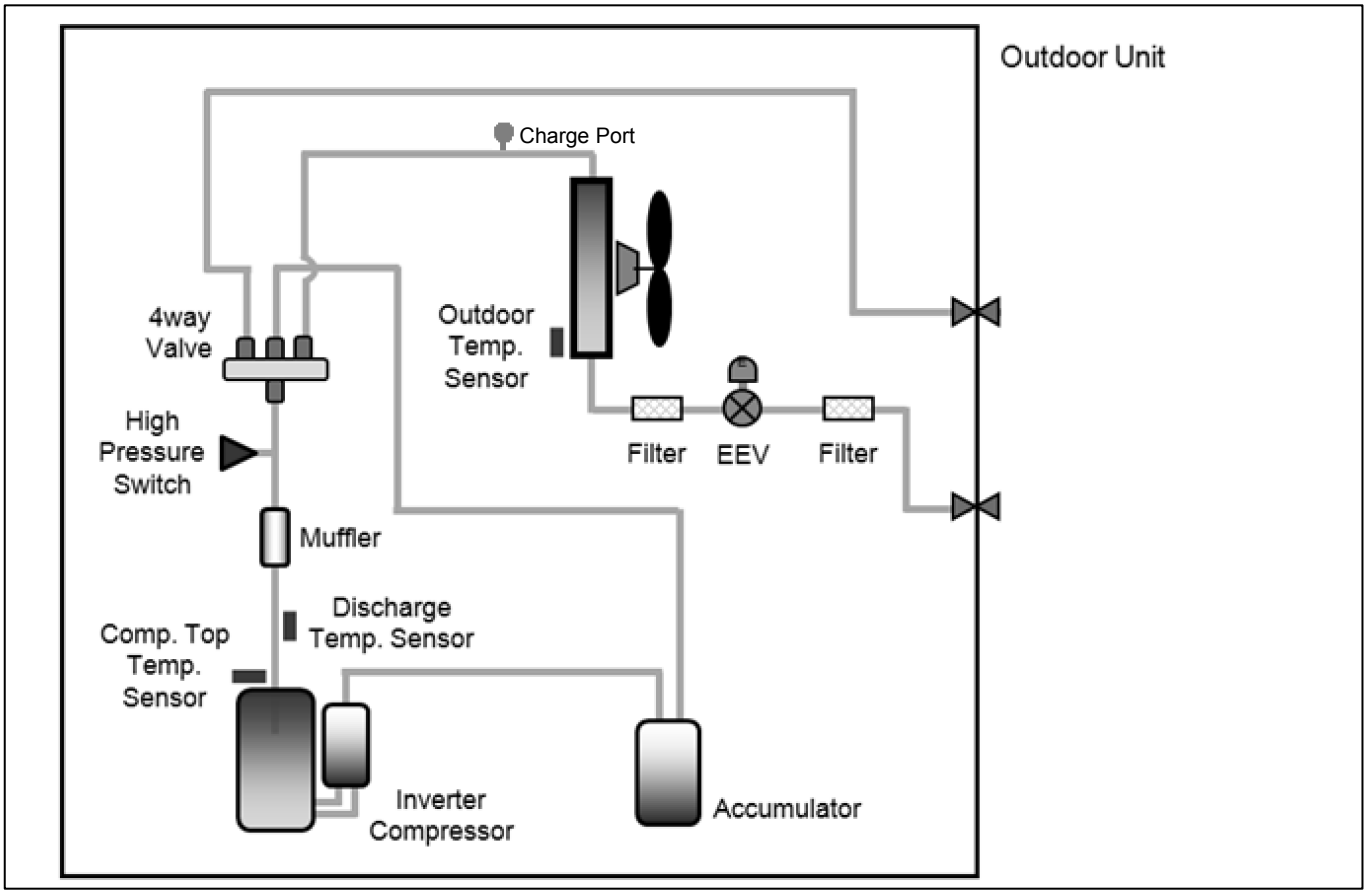

5. Cycle Diagrams

5-1. Outdoor Unit

3) AE120/140/160JXED*H/EU

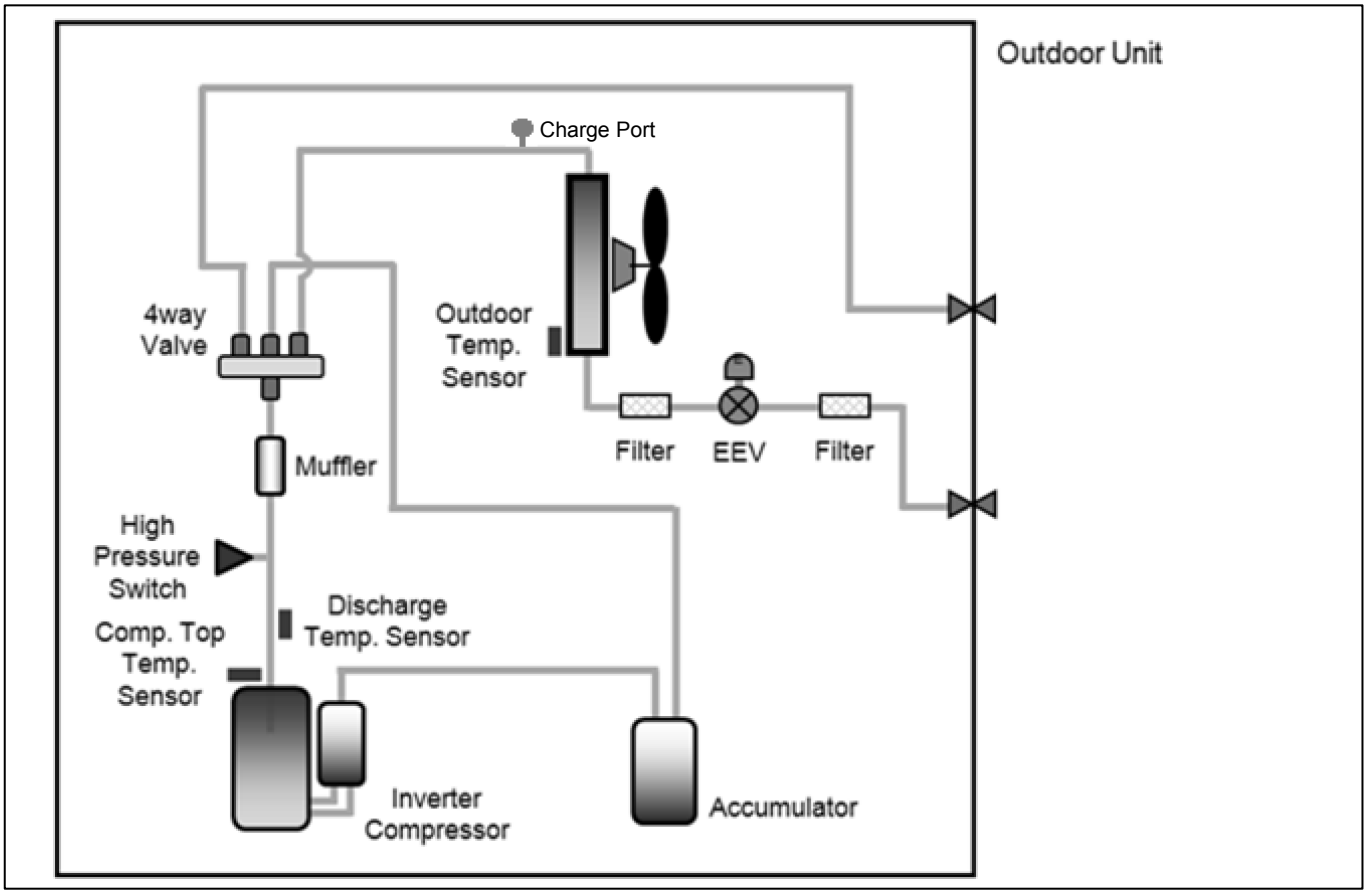

6. Wiring Diagrams

6-1. Outdoor Unit

1) AE040/060JXEDEH/EU

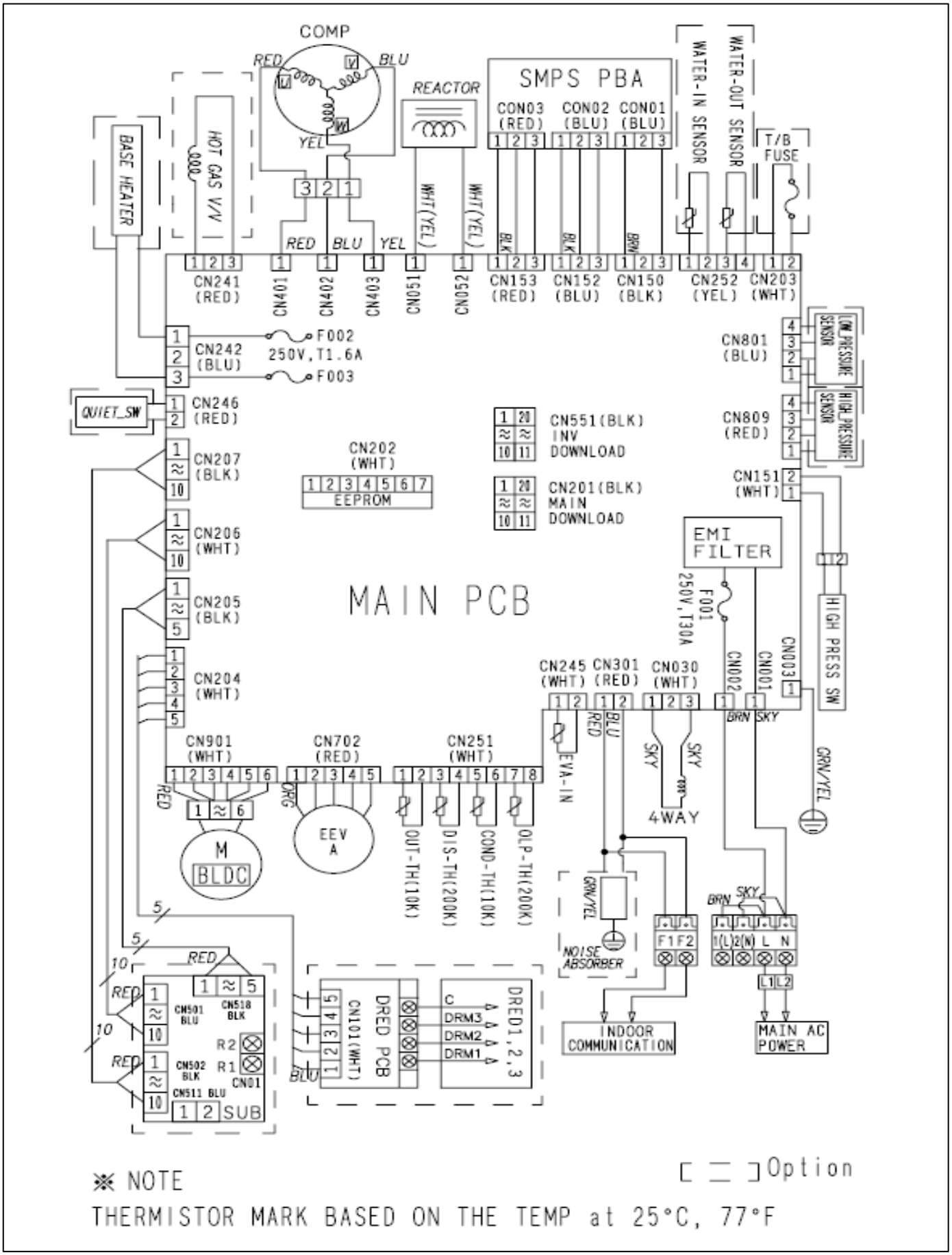

6. Wiring Diagrams

6-1. Outdoor Unit

2) AE090/120/140/160JXEDEH/EU

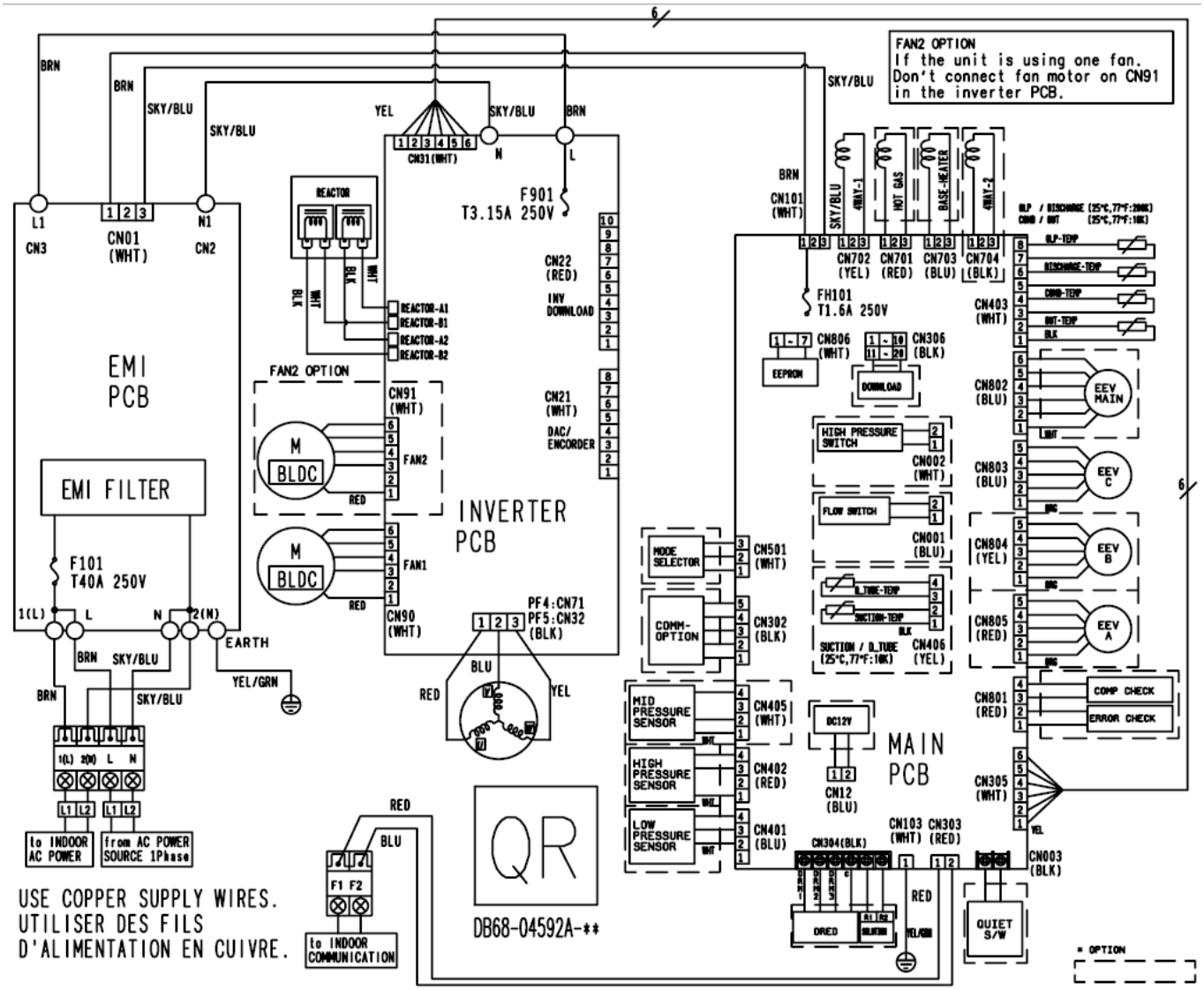

6. Wiring Diagrams

6-1. Outdoor Unit

3) AE090/120/140/160JXEDGH/EU

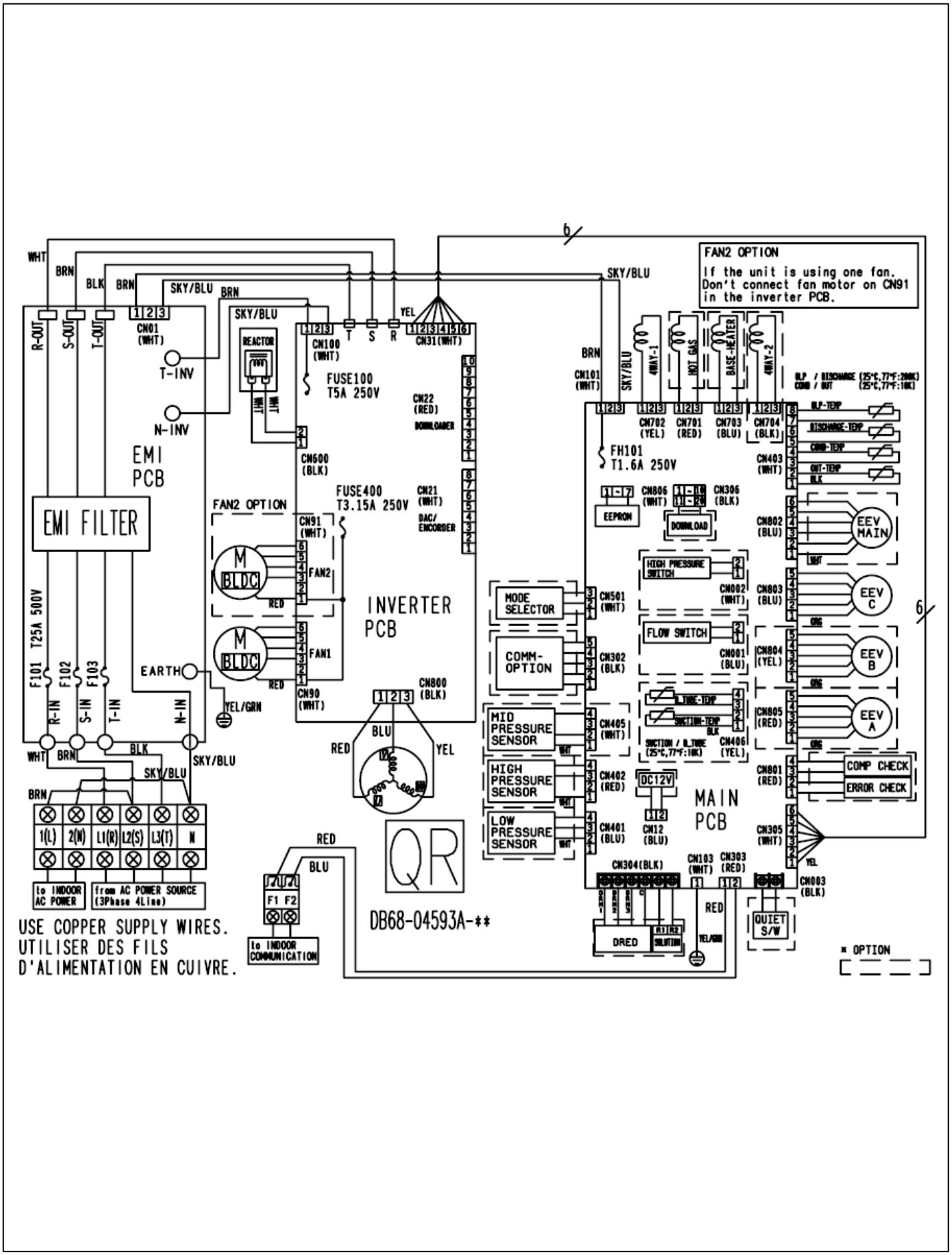

7. Electric Specifications

7-1. Outdoor Unit

1) Power Supply (Single Phase)

Outdoor Unit	Rated		Voltage Range		MCA (A)	MFA (A)
	Hz	Volts	Min.	Max.		
AE040JXEDEH/EU	50	220-240	198	264	20	25.0
AE060JXEDEH/EU	50	220-240	198	264	20	25.0
AE090JXEDEH/EU	50	220-240	198	264	22	27.5
AE120JXEDEH/EU	50	220-240	198	264	28	35.0
AE140JXEDEH/EU	50	220-240	198	264	30	37.5
AE160JXEDEH/EU	50	220-240	198	264	32	40.0

2) Power Supply (3 Phase)

Outdoor Unit	Rated		Voltage Range		MCA	MFA
	Hz	Volts	Min.	Max.		
AE090JXEDGH/EU	50	380-415	342	457	10	16.1
AE120JXEDGH/EU	50	380-415	342	457	10	16.1
AE140JXEDGH/EU	50	380-415	342	457	11	16.1
AE160JXEDGH/EU	50	380-415	342	457	12	16.1

Note

◆ Power supply cords of parts of appliances for outdoor use shall not be lighter than polychloroprene sheathed flexible cord.
(Code designation IEC : 60245 IEC 66 / CENELEC:H07RN-F)
◆ Select power supply cord based on MCA.
◆ MFA is used to select the circuit breaker and the ground fault circuit interrupter (earth leakage circuit breaker).
◆ MCA represents maximum input current.
◆ MFA represents capacity which may accept MCA.
◆ Communication cable specification : 0.75~1.5㎟, 2wires

※ Abbreviations
- MCA : Minimum Circuit Amps.(A)
- MFA : Maximum Fuse Amps.(A)

8. Sound Pressure Level

8-1. Operation Sound Level

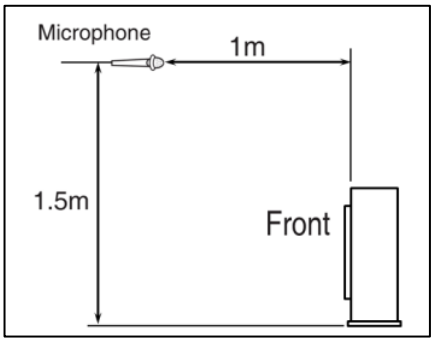

Unit (dB(A))

Model	Heating	Cooling
AE040JXEDEH/EU	46	46
AE060JXEDEH/EU	47	47

Note

- These operation sound value were obtained in an anechoic room. Sound pressure level will vary depending on a range of factors such as the construction of the particular room where the equipment is installed.
- Operation sound level may differ depending on operation and ambient conditions.

8-2. NC Curve

1) AE040JXEDEH/EU

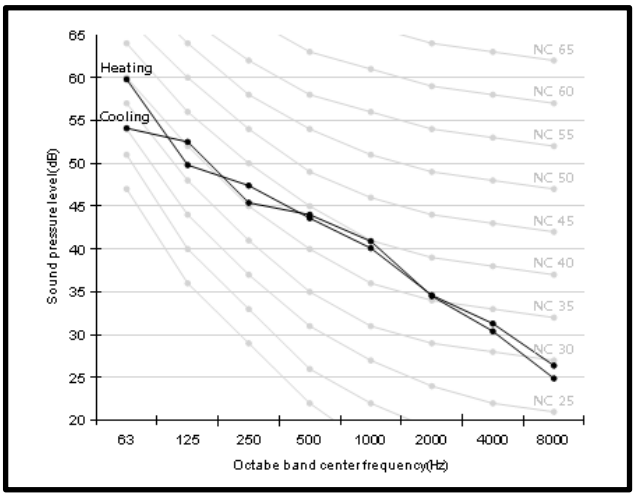

2) AE060JXEDEH/EU

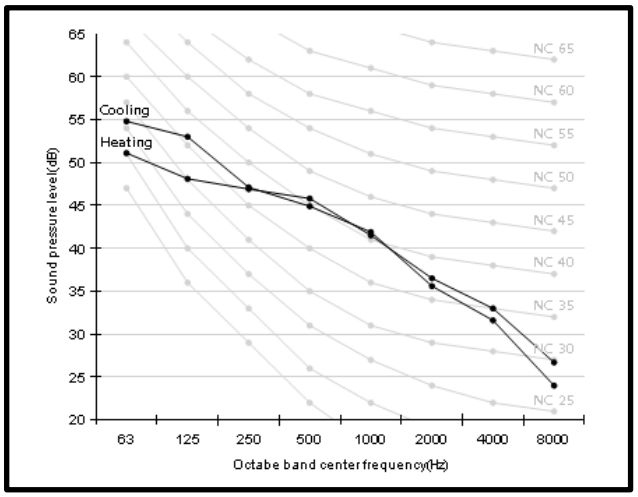

8. Sound Pressure Level

8-3. Operation Sound Level

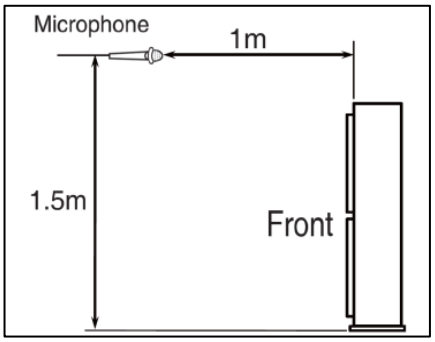

Unit (dB(A))

Model	Heating	Cooling
AE090JXEDEH/EU	49	50
AE120JXEDEH/EU	50	50
AE140JXEDEH/EU	50	52
AE160JXEDEH/EU	52	54

Note

- These operation sound value were obtained in an anechoic room. Sound pressure level will vary depending on a range of factors such as the construction of the particular room where the equipment is installed.
- Operation sound level may differ depending on operation and ambient conditions.

8-4. NC Curve

1) AE090JXEDEH/EU

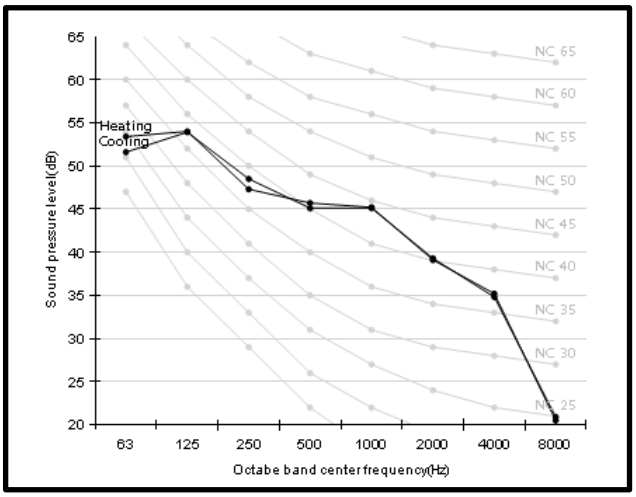

2) AE120JXEDEH/EU

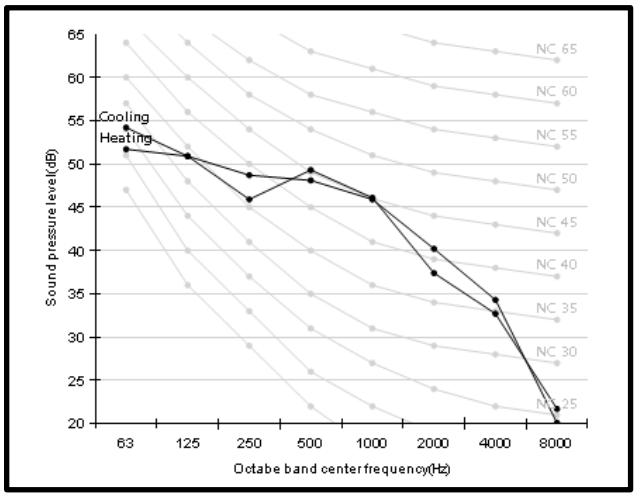

3) AE140JXEDEH/EU

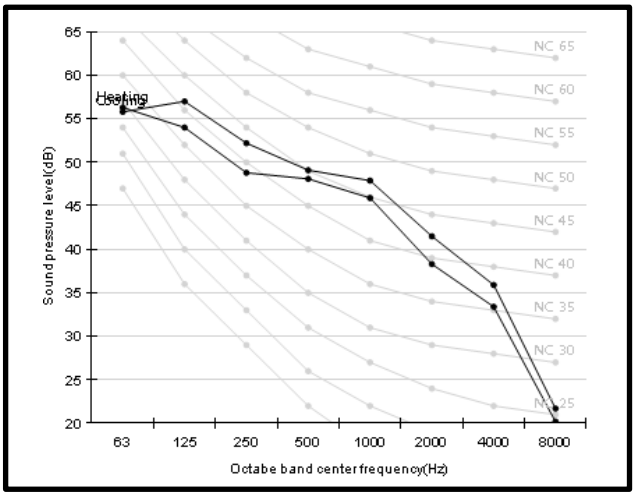

4) AE160JXEDEH/EU

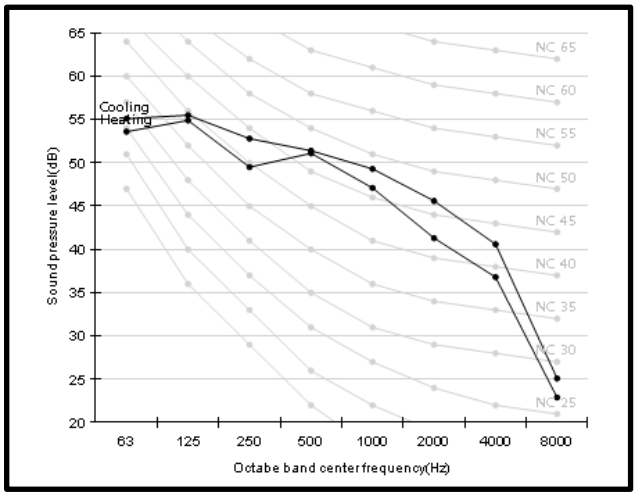

8. Sound Pressure Level

8-5. Operation Sound Level

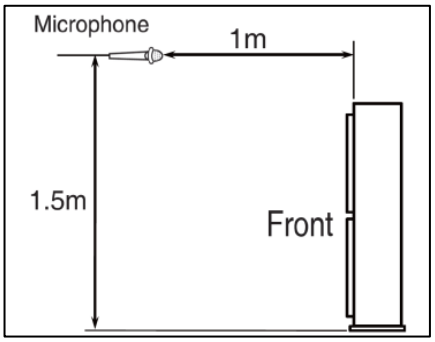

Unit (dB(A))

Model	Heating	Cooling
AE090JXEDGH/EU	49	50
AE120JXEDGH/EU	50	50
AE140JXEDGH/EU	50	52
AE160JXEDGH/EU	52	54

Note

- These operation sound value were obtained in an anechoic room. Sound pressure level will vary depending on a range of factors such as the construction of the particular room where the equipment is installed.
- Operation sound level may differ depending on operation and ambient conditions.

8-6. NC Curve

1) AE090JXEDGH/EU

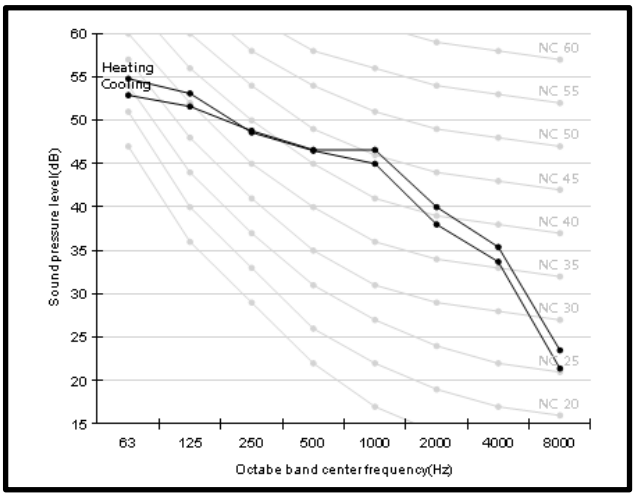

2) AE120JXEDGH/EU

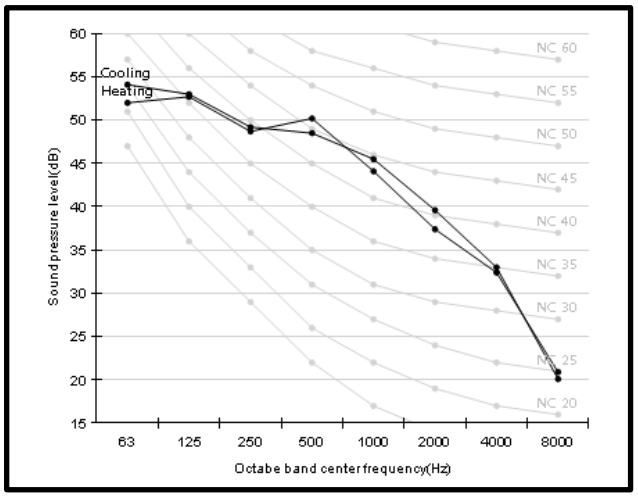

3) AE140JXEDGH/EU

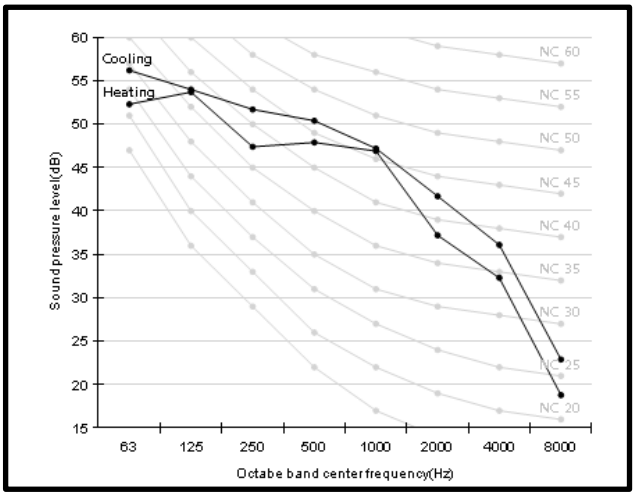

4) AE160JXEDGH/EU

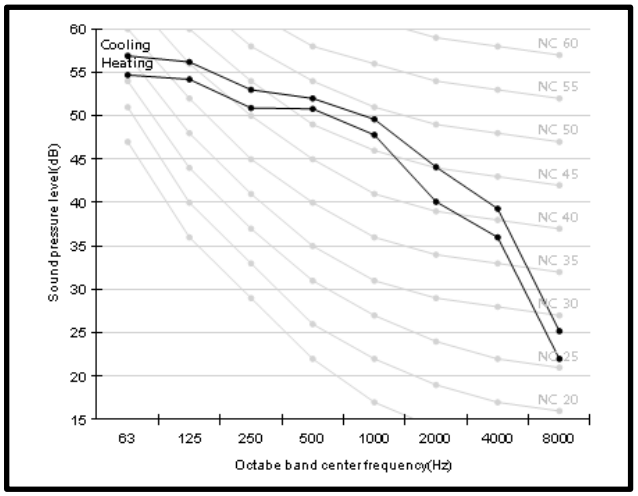

9. Operation Range

9-1. Outdoor Unit

1) Cooling

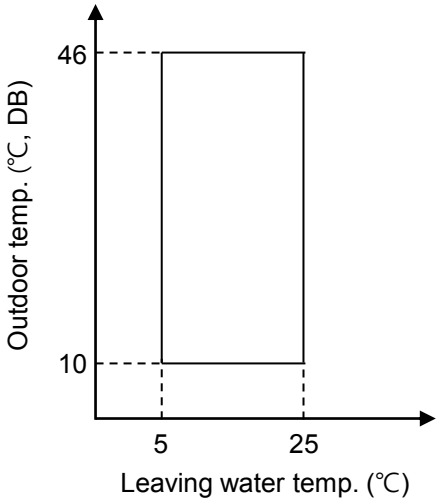

2) Heating

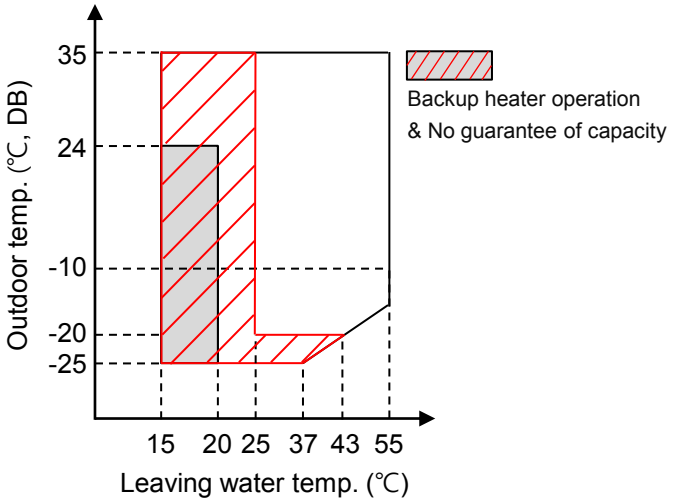

MONO Outdoor Unit		Water Temp. (℃)			Water Flow Rates (LPM)			Air Temp. (℃, DB/WB)		
		Min	Std	Max	Min	Std	Max	Min	Std	Max
Controller	Cooling	5	-	25						
	Heating	15	-	55						
Cooling	Inlet	-	23 (12*2)	30	12 (7*1)	Δ 5℃	58 (48*1)	10/-	35/24	46/28
	Outlet	5	18 (7*2)	25						
Heating	Inlet	5	30 (40*2)	-				-25/-	7/6 (-7/-8*3)	35/24
	Outlet	25 (15*4)	35 (45*2)	55						

*1) Model : AE040JXEDEH/AE090JNYDEH
AE060JXEDEH/AE090JNYDEH
AE090JXEDEH/AE090JNYDEH
AE090JXEDGH/AE090JNYDEH

*2) Eurovent Test Condition #2

*3) NF PAC Low Temp. Heating Condition.

*4) Back up heater operation.

※ ▨ Operation of outdoor unit possible, but no guarantee of capacity in this condition. (-25℃ ≤ Outdoor temp <-20℃)

3) DHW (Domestic Hot Water Tank)

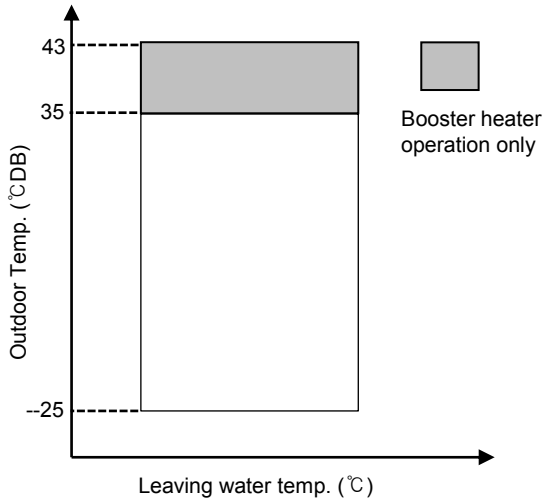

※ Special condition(35℃ < Outdoor temp. ≤ 43℃) is operated by only Booster Heater.
SAMSUNG doesn't supply DHW for EHS Split.
Since it is a reference data, you have to check DHW operation range for yours.

III. Hydro Unit

1. Specifications 34
2. Dimensional Drawings 36
3. Cycle Diagrams 37
4. Wiring Diagrams 38
5. Electric Specifications 40
6. Hydraulic Performance 43

1. Specifications

1-1. Hydro Unit (1Φ)

Model Name	Indoor Unit				AE090JNYDEH/EU	AE160JNYDEH/EU
Hydro Unit	Power Supply			Φ, #, V, Hz	220~240V, 50Hz, 1Φ	220~240V, 50Hz, 1Φ
	Water Pump	Type (Model Name)		-	Centrifurugal (UPM3 25-7.5)	Centrifurugal (Stratos 25 1-9)
		Motor Input		W	60	90
		Number of Unit		EA	1	1
	Flow Switch	Type (Model Name)		-	Magnetic, Decreasing	Magnetic, Decreasing
		Min. flow rates		LPM	7 ± 1.5	12 ± 1.5
	Electric Heater			W	4,000	6,000
	Expansion Vessel			Liter	8	8
	Pressure Relief Valve			bar	2.9	2.9
	Air Purge Valve			Φ, inch	BSPP male 3/8"	BSPP male 3/8"
	Service Valve			Φ, inch	BSPP male 1 1/4"	BSPP male 1 1/4"
	Sound *1	Sound Pressure	Heating Std	dB(A)	26	33
			Cooling Std	dB(A)	26	33
		Sound Power	Heating Std	dB(A)	40	47
	External Dimension	Net Weight		kg	45.0	45.0
		Shipping Weight		kg	55.0	55.0
		Net Dimensions (WxHxD)		mm	510 x 850 x 315	510 x 850 x 315
		Shipping Dimensions (WxHxD)		mm	564 x 1,024 x 412	564 x 1,024 x 412
	External Control	Back up Boiler		-	230VAC 0.5A(DO)	230VAC 0.5A(DO)
		Room Thermostat		-	230VAC 10mA(DI)	230VAC 10mA(DI)
		Solar Pump		-	230VAC 10mA(DI)	230VAC 10mA(DI)
		Valves, 2 or 3way		-	230VAC 0.5A(DO)	230VAC 0.5A(DO)

*1) Sound level was acquired in an anechoic room. Thus actual noise level may be different depending on the installation conditions.

1. Specifications

1-2. Hydro Unit (3Φ)

Model Name	Indoor Unit				AE090JNYDGH/EU	AE160JNYDGH/EU
Hydro Unit	Power Supply			Φ, #, V, Hz	380~4150V, 50Hz, 3Φ	380~4150V, 50Hz, 3Φ
	Water Pump	Type (Model Name)		-	Centrifurugal (UPM3 25-7.5)	Centrifurugal (Stratos 25 1-9)
		Motor Input		W	60	90
		Number of Unit		EA	1	1
	Flow Switch	Type (Model Name)		-	Magnetic, Decreasing	Magnetic, Decreasing
		Min. flow rates		LPM	7 ± 1.5	12 ± 1.5
	Electric Heater			W	6,000	6,000
	Expansion Vessel			Liter	8	8
	Pressure Relief Valve			bar	2.9	2.9
	Air Purge Valve			Φ, inch	BSPP male 3/8"	BSPP male 3/8"
	Service Valve			Φ, inch	BSPP male 1 1/4"	BSPP male 1 1/4"
	Sound *1	Sound Pressure	Heating Std	dB(A)	26	33
			Cooling Std	dB(A)	26	33
		Sound Power	Heating Std	dB(A)	40	47
	External Dimension	Net Weight		kg	46.5	46.5
		Shipping Weight		kg	56.0	56.0
		Net Dimensions (WxHxD)		mm	510 x 850 x 315	510 x 850 x 315
		Shipping Dimensions (WxHxD)		mm	564 x 1,024 x 412	564 x 1,024 x 412
	External Control	Back up Boiler		-	230VAC 0.5A(DO)	230VAC 0.5A(DO)
		Room Thermostat		-	230VAC 10mA(DI)	230VAC 10mA(DI)
		Solar Pump		-	230VAC 10mA(DI)	230VAC 10mA(DI)
		Valves, 2 or 3way		-	230VAC 0.5A(DO)	230VAC 0.5A(DO)

*1) Sound level was acquired in an anechoic room. Thus actual noise level may be different depending on the installation conditions.

2. Dimensional Drawings

2-1. Hydro Unit

1) AE090/160JNYD*H/EU

(Unit : mm)

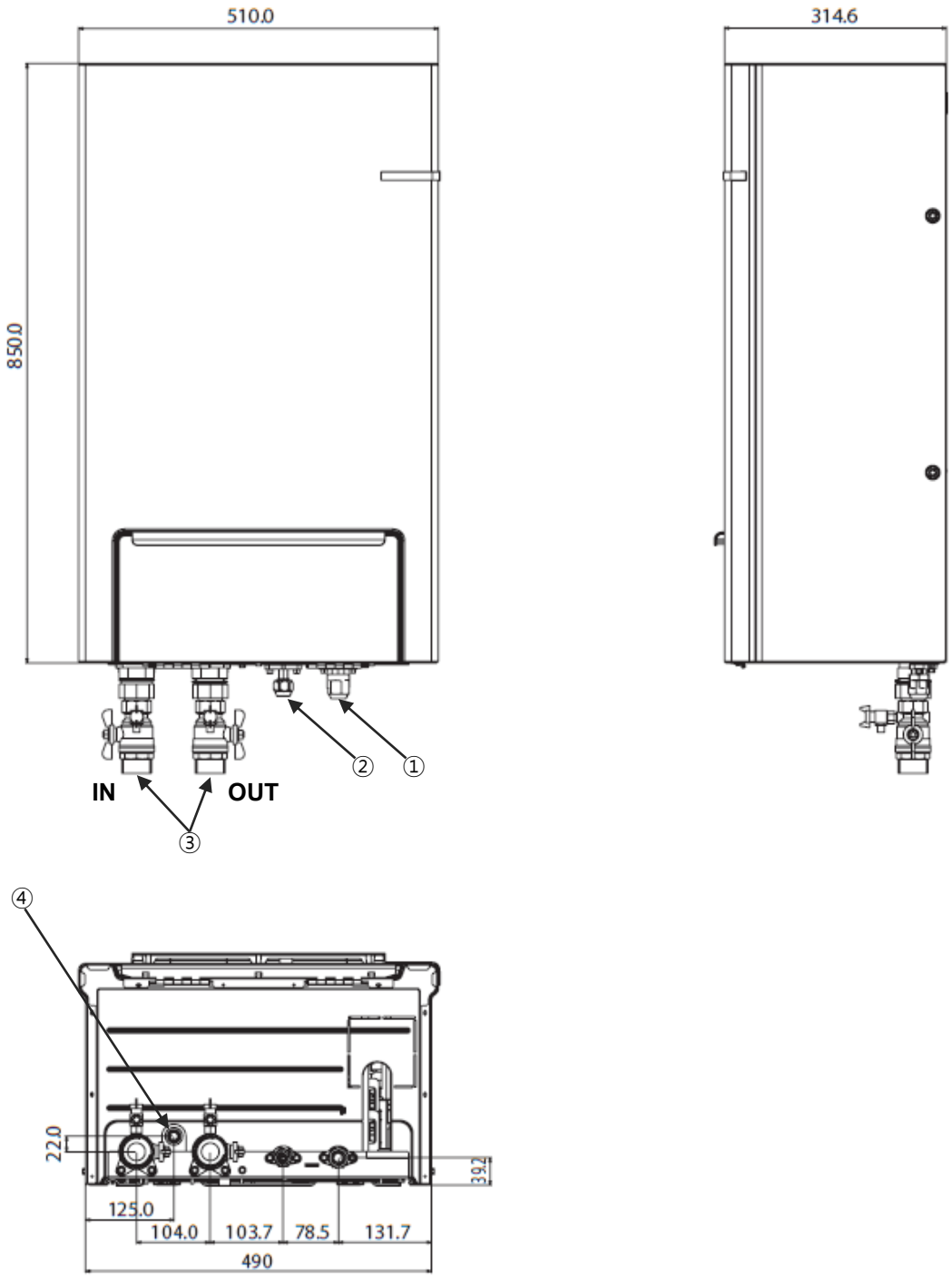

No.	Table of Descriptions
①	Gas Ref. Pipe
②	Liquid Ref. Pipe
③	Water Pipe (Inlet/Outlet)
④	Drain Hose Connector

3. Cycle Diagrams

3-1. Hydro Unit

1) AE090/160JNYD*H/EU

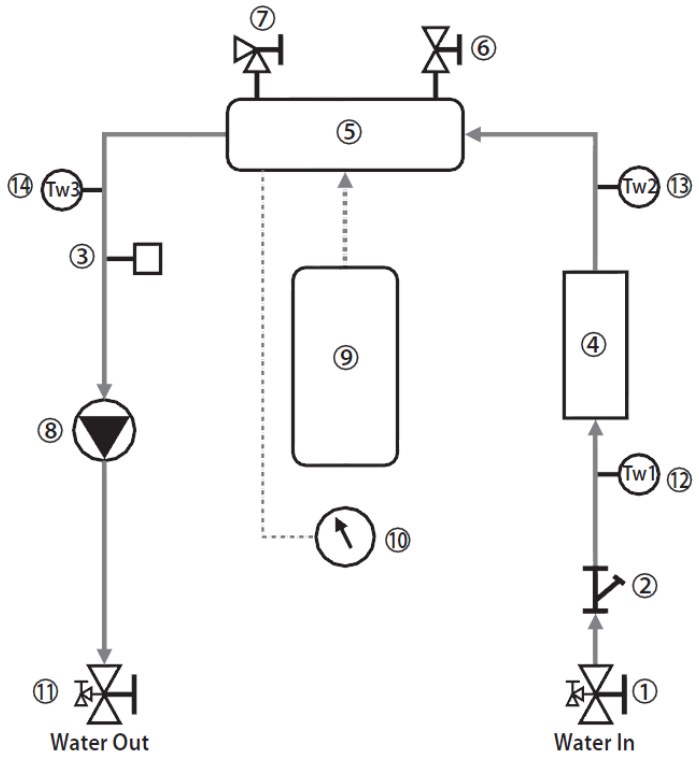

No.	Description
①	Water Pipe Service Valve (R)
②	Strainer
③	Flow Switch
④	Heat Changer
⑤	Backup Heater
⑥	Pressure Relief Valve
⑦	Air-vent
⑧	Variable Speed water pump
⑨	Expansion Tank
⑩	Manometer

No.	Description
⑪	Water Pipe Service Valve (L)
⑫	Water Temp. Sensor 1
⑬	Water Temp. Sensor 2
⑭	Water Temp. Sensor 3

4. Wiring Diagrams

4-1. Hydro Unit

1) AE090/160JNYDEH/EU

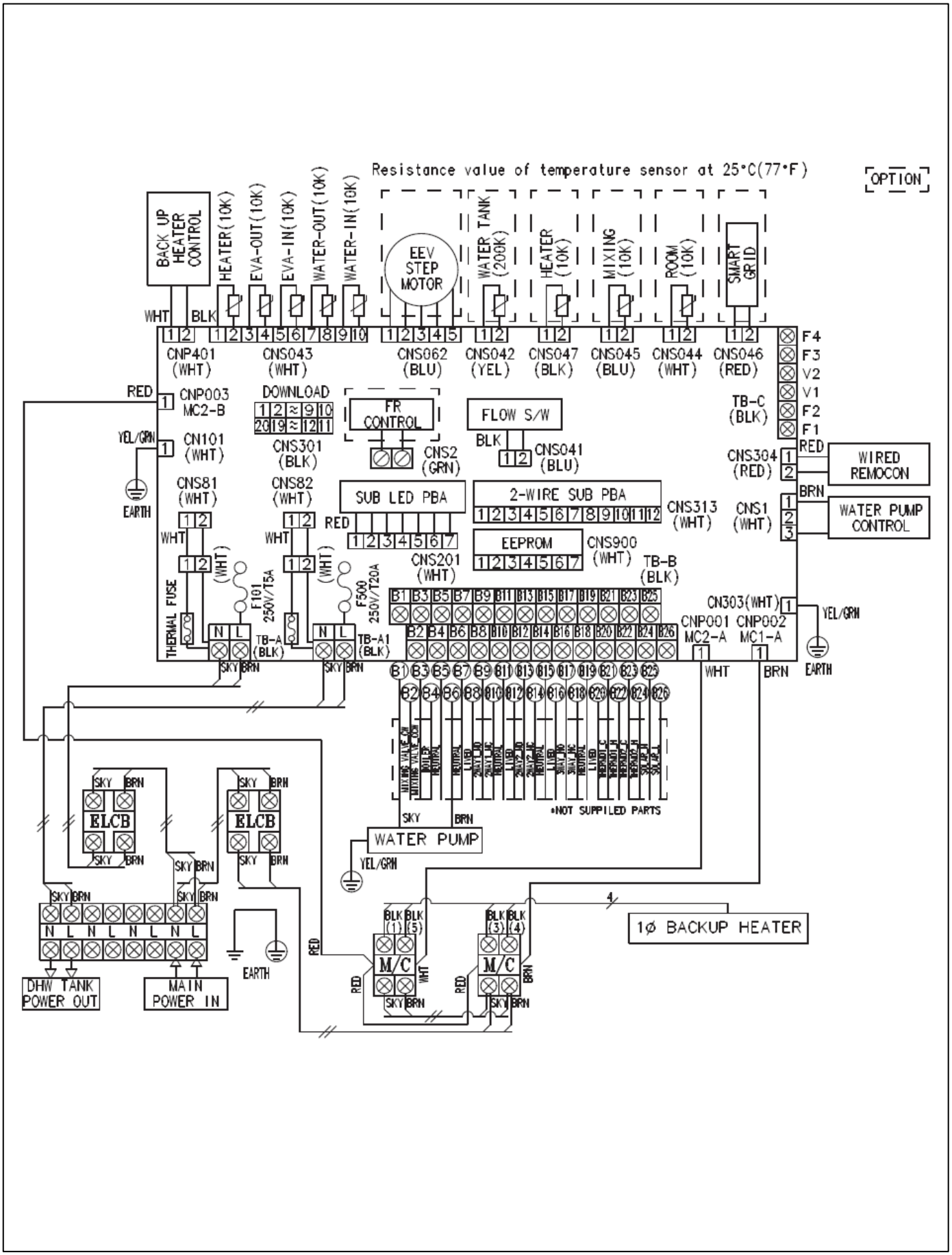

4. Wiring Diagrams

4-1. Hydro Unit

2) AE090/160JNYDGH/EU

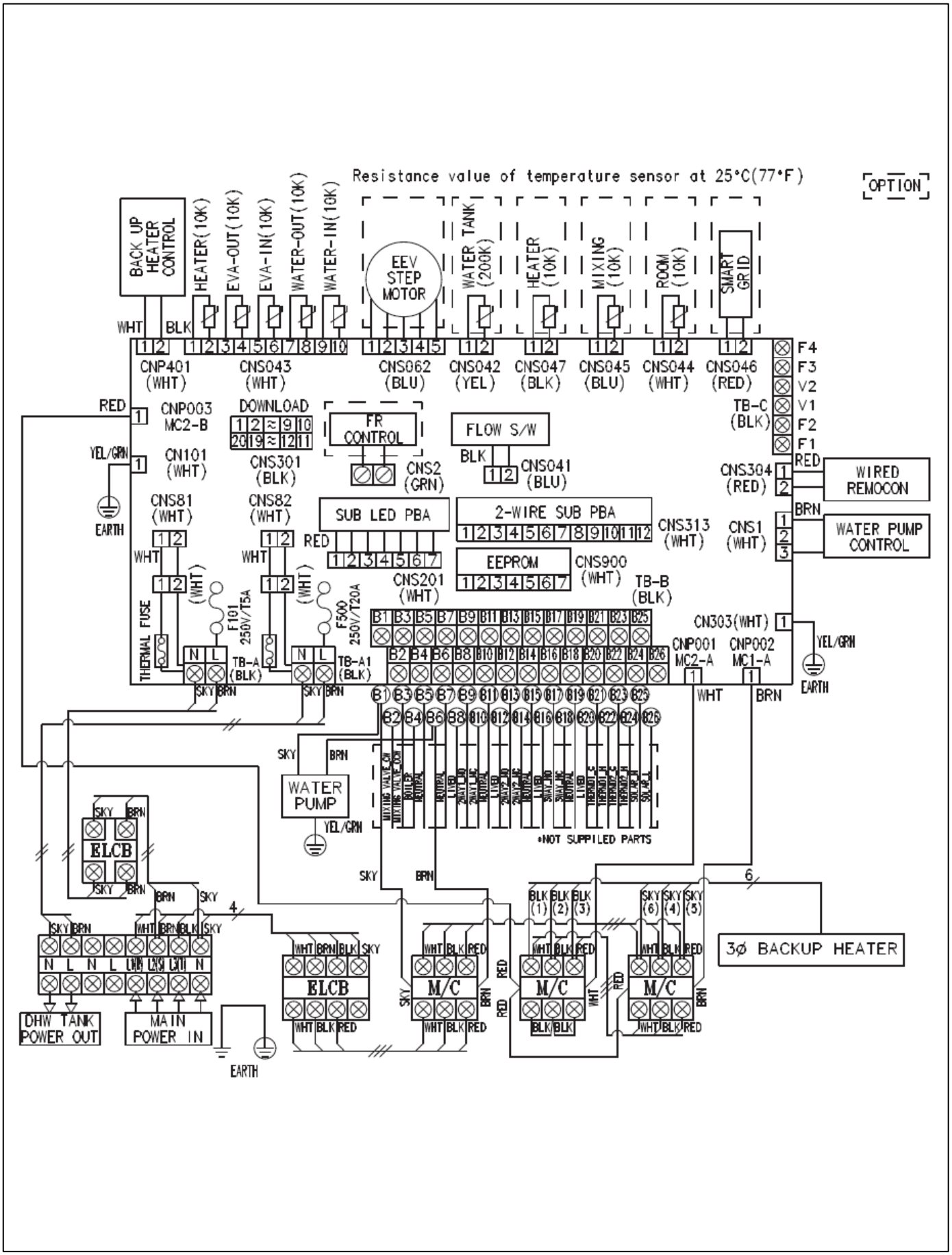

5. Electric Specifications

5-1. Hydro Unit

1) Power supply & Communication

Description	No. of wires	Max. A	Thickness	Supply Scope
Main power	2+ground	32A	4.0mm² H05RN-F or H07RN-F	Field supply (230V~, Input)
Communication	2	6A	0.75mm² H05RN-F or H07RN-F	7Vdc data

Communication cable connection

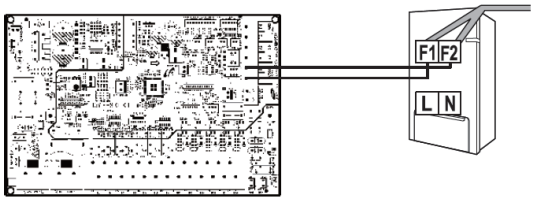

Power wire connection

1 phase

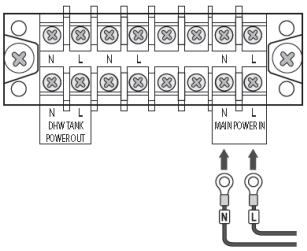

3 phase

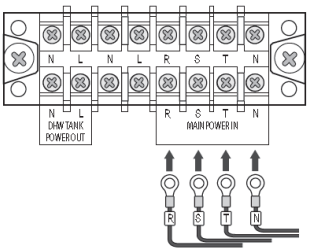

2) Back-up Heater Power supply

Model	Heater capacity (kW)	ELCB capacity (A)
AE160JNYDGH/AE090JNYDGH	6	20
AE160JNYDEH	6	40
AE090JNYDEH	4	30

※ Circuit Breaker(ELCB, ELB, MCCB etc.)s written above are already included in the hydro unit.
ELCB : Earth leakage circuit breaker
ELB : Earth leakage breaker
MCCB : Molded case circuit breaker

1 phase

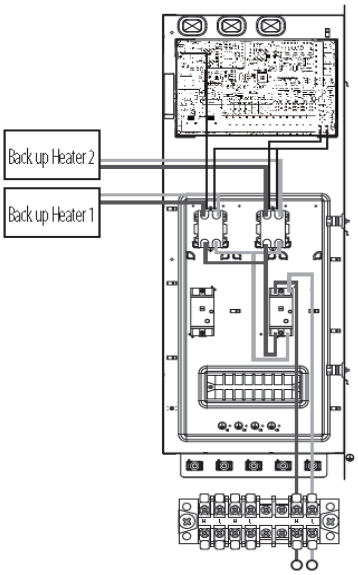

3 phase

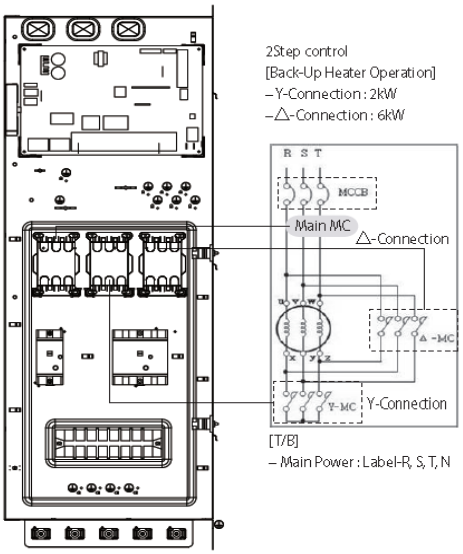

Booster heater (DHW)

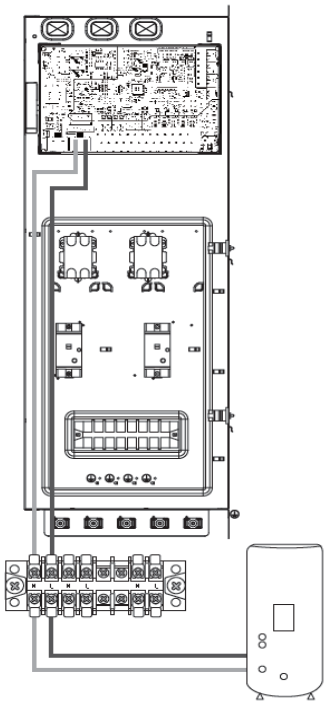

5. Electric Specifications

5-1. Hydro Unit

3) Thermostat

Description	No. of wires	Max. A	Thickness	Supply Scope
Room Thermostat for weather control	4	22 mA	> 0.75 mm², H05RN-F or H07RH-F	Field supply (230 V~, Input)

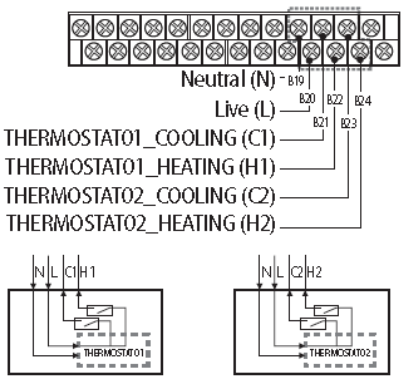

1. Before the installation, hydro unit should be turned off.
2. Using the appropriate equipment to correct position of terminal block as shown on the diagram.
3. Make sure what type is you use.
   - Contact signal must be " L ". When you install two thermostats, thermostat2 is prior to thermostat1.

4) 2way Valve

Description	No. of wires	Max. A	Thickness	Supply Scope
Motorized 2-way valve to shut off UFH loops during cooling.	2+ground	22 mA	> 0.75 mm², H05RN-F or H07RH-F	Field supply (230 V~, Output)

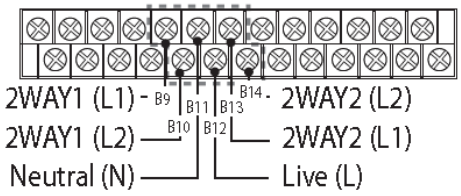

* Connection of 2 wires 2-way valve

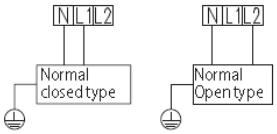

In case of normal closed type

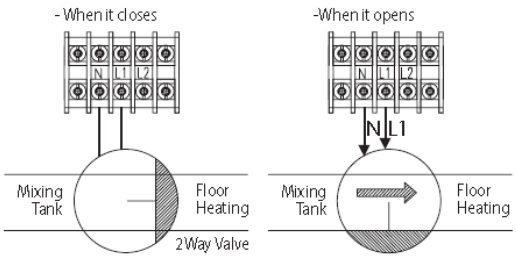

In case of normal open type

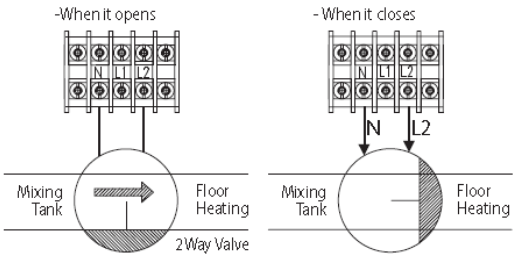

2-way motorized valve

- ▶ When outlet water temperature reach to lower than 16 °C in cooling mode, UFH loops will be closed.
- ▶ 230V AC
- ▶ 2 wires(Normal Open or Normal Close)

1. Before the installation, hydro unit should be turned off.
2. Using the appropriate equipment to correct position of terminal block as shown on the diagram.
3. Make sure what type is you use.
   - Normal OPEN or Normal CLOSED.

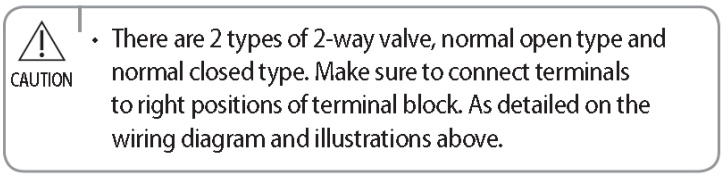

- There are 2 types of 2-way valve, normal open type and normal closed type. Make sure to connect terminals to right positions of terminal block. As detailed on the wiring diagram and illustrations above.

5. Electric Specifications

5-1. Hydro Unit

5) 3way Valve

Description	No. of wires	Max. A	Thickness	Supply Scope
Diverting type 3way valve	4	22 mA	> 0.75 mm², H05RN-F or H07RN-F	Field supply (230V~, Input)

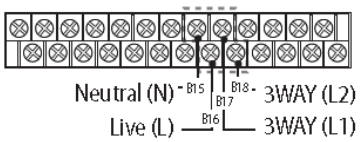

Status	L1	L2
A (Initial)	OFF	ON
B	ON	OFF

Field Setting Valve (#3071) "0" Floor heating as default	Field Setting Valve (#3071) "1" DHW tank as default
A: FLOOR HEATING, HYDRO UNIT, 3WAY V/V, DHW TANK	A: FLOOR HEATING, HYDRO UNIT, 3WAY V/V, DHW TANK
B: FLOOR HEATING, HYDRO UNIT, 3WAY V/V, DHW TANK	B: FLOOR HEATING, HYDRO UNIT, 3WAY V/V, DHW TANK

3-way diverting valve for water tank

- ▶ Diverting typecooling mode, UFH loops will be closed.
- ▶ 230V AC

1. Before the installation, hydro unit should be turned off.
2. Using the appropriate equipment to correct position of terminal block as shown on the diagram.
3. Make sure what type of 3 way V/V you use.

5) Back-up Boiler

Description	No. of wires	Max. A	Thickness	Supply Scope
Back-up Boiler	2+ground	10 mA	0.75mm² H05RN-F or H07RN-F	Field supply (230V~, Input)

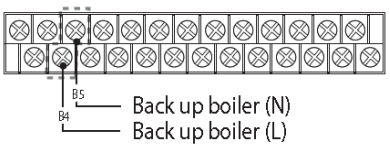

1. Before the installation, hydro unit should be turned off.
2. Using the appropriate equipment to correct position of terminal block as shown on the diagram.
3. Make sure EXT-CTRL signal of back up boiler must be 230Vac.
   - Do not connect supply power of back up boiler directly.

When it set back up boiler on the hydro unit (relay off)

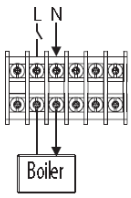

When it order to back up boiler operates (relay on)

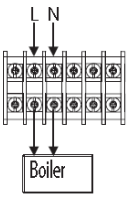

6) Mixing Valve

Description	No. of wires	Max. A	Thickness	Supply Scope
Mixing valve	4	22 mA	> 0.75 mm², H05RN-F or H07RH-F	Field supply (230V~, Input)

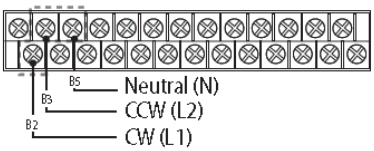

1. Before the installation, hydro unit should be turned off.
2. Using the appropriate equipment to correct position of terminal block as shown on the diagram.

6. Hydraulic Performance

6-1. Water Pump

1) ESP(External Static Pressure) Diagram

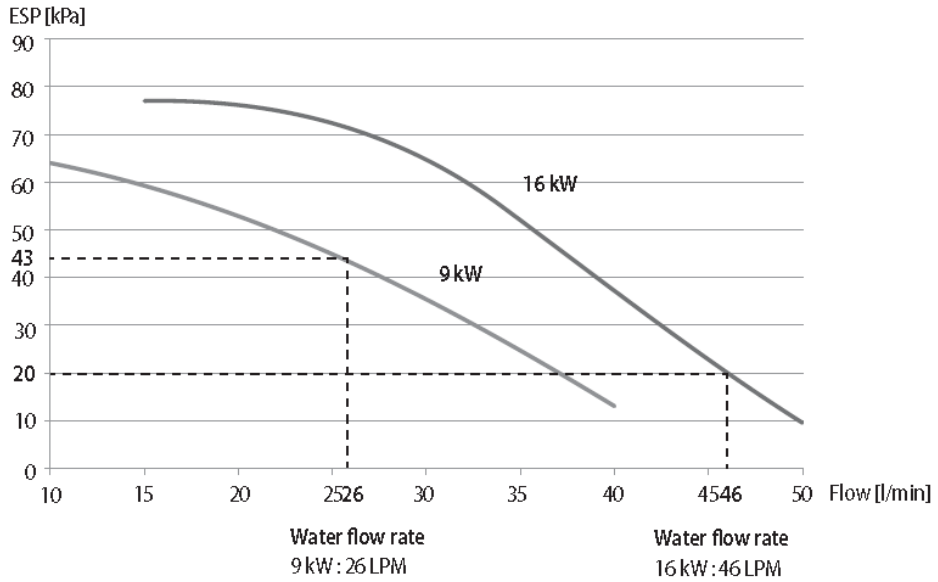

The illustration below shows the external static pressure of the unit depending on the water flow and the pump setting.
If the pressure loss of total system is over 43(9 kW) or 20(16 kW)kPa, additional water pump should be installed in series.
Otherwise, the flow rate might decreased, causing insufficient heating or cooling.
When ESP is not enough, additional pump should be installed. In this case, install the PWM control external type pump additionally.

6-2. Expansion Vessel

1) Setting the pre-pressure of the expansion vessel

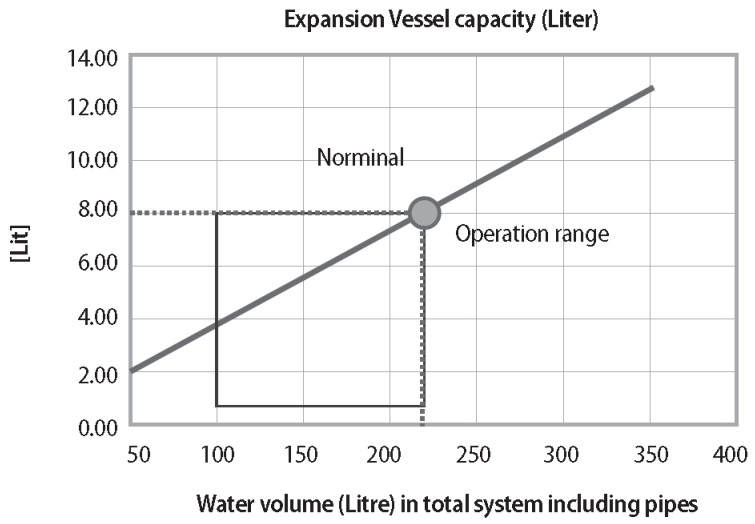

When it is required to change the default pre-pressure of the expansion vessel(1 bar), keep in mind the following guidelines

◆ Use only dry nitrogen to set the expansion vessel pre-pressure.
◆ Inappropriate setting of the expansion vessel pre-pressure will lead to malfunction of the system. Therefore, the pre-pressure should only be adjusted by a licensed installer.

CAUTION
- Water volume of total system for reliable performance is minimum 50 liters.

III. Application

1. Application Examples ……..……..…..…..…… 45
2. Mixing Valve ……..…… 47

1. Application Examples

1-1. Space Heating

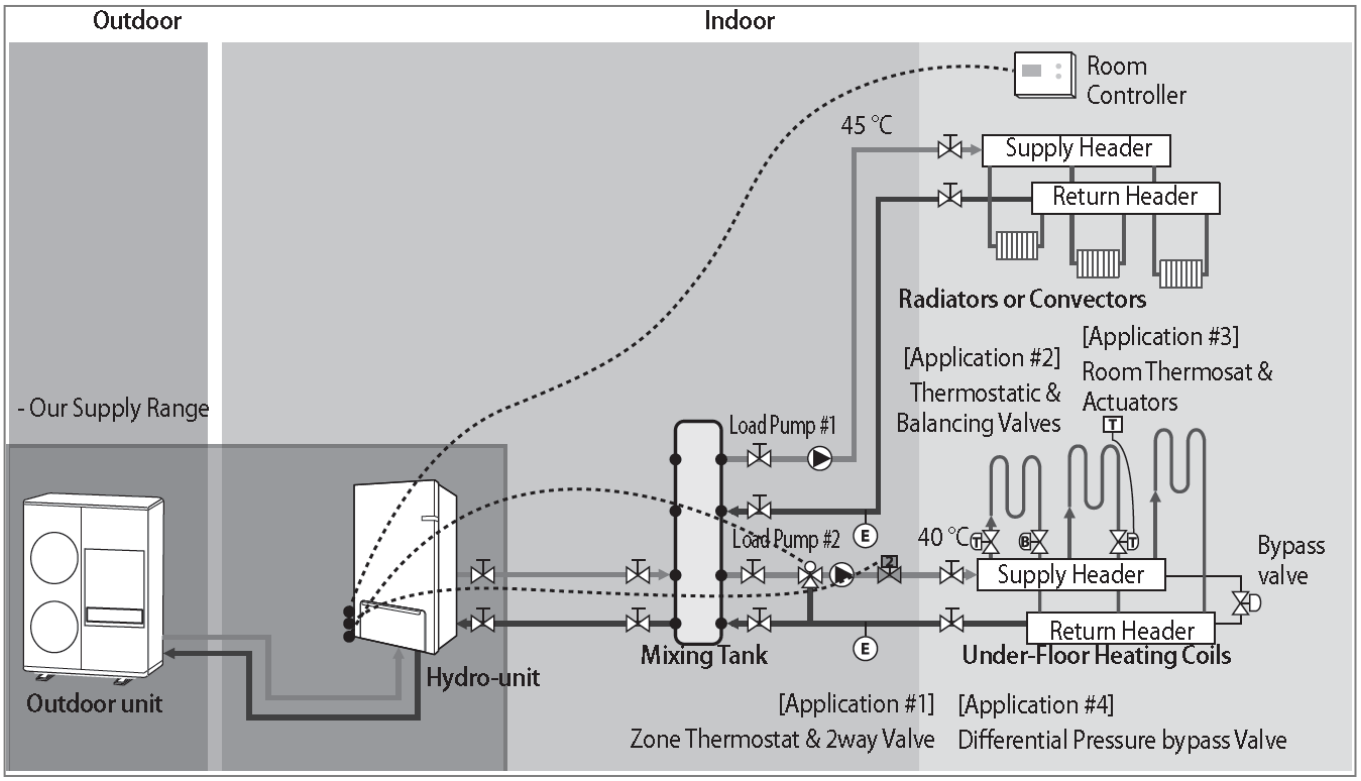

1-2. Space Heating + Water Heating

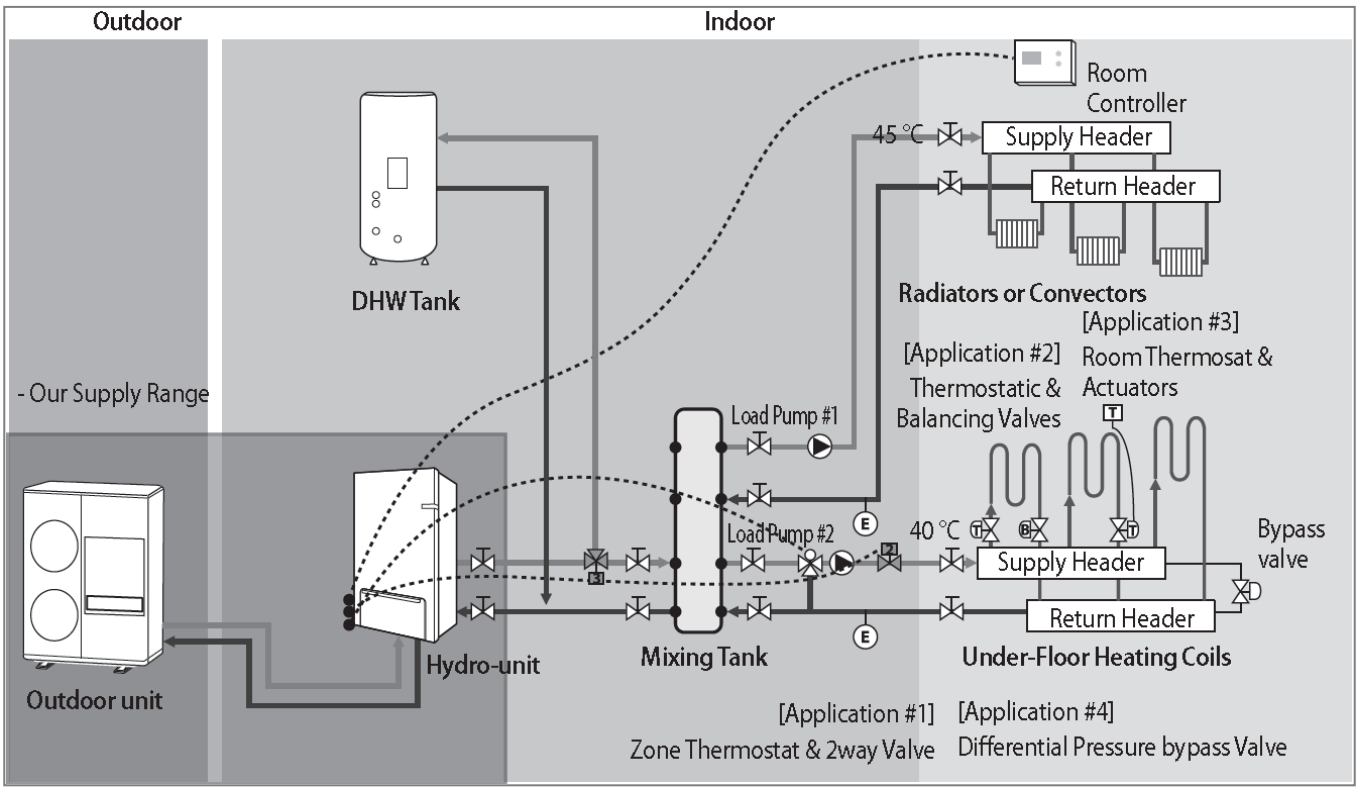

1. Application Examples

1-3. Hybrid Application (Back-up Boiler & Solar Panel connected)

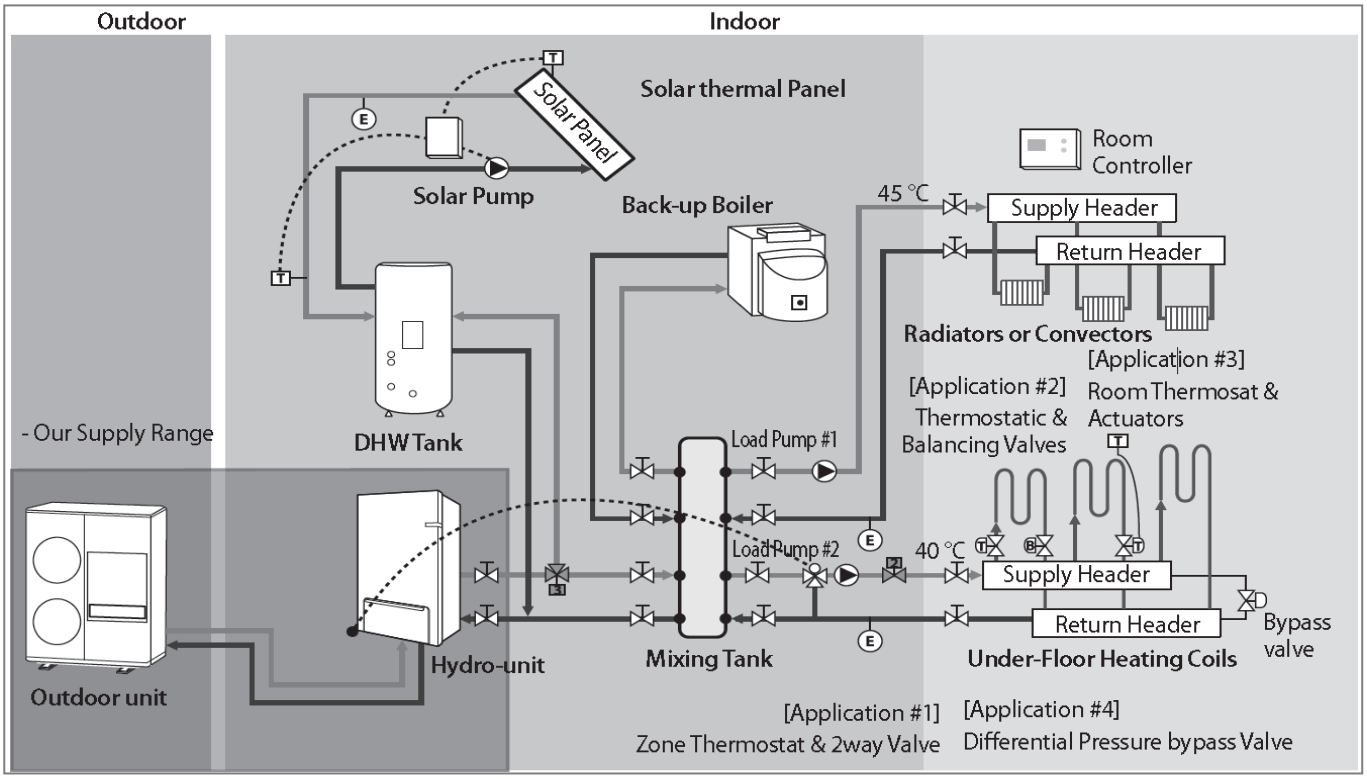

2. Mixing Valve

1-1. Mixing Valve Installation

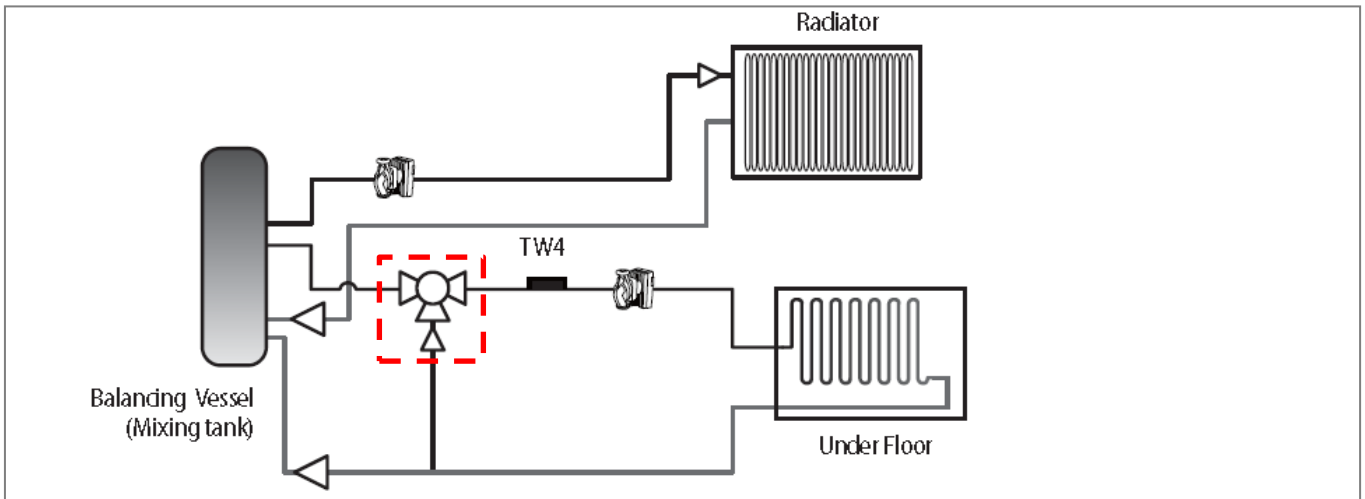

When two different zones are used with different temperature, adjust the temperature of discharge water to high temperature water and control the amount of bypass to provide low temperature water by applying the mixing valve and temperature sensor of the mixing valve (TW4).

1-2. Connection Of Mixing Valve

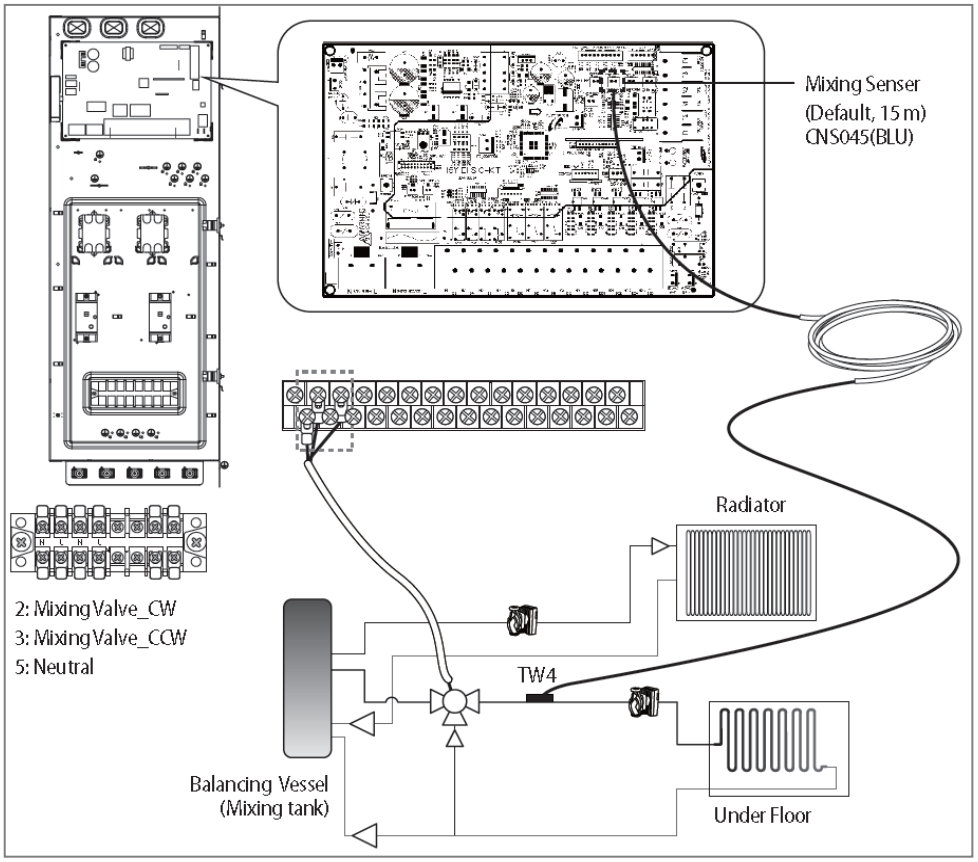

Description	No. of wires	Max. A	Thickness	Supply Scope
Mixing valve	4	22 mA	> 0.75 mm², H05RN-F or H07RH-F	Field supply (230 V~, Input)

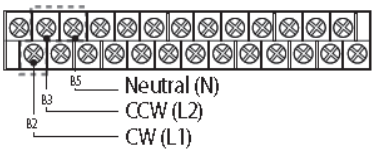

1. Before the installation, hydro unit should be turned off.
2. Using the appropriate equipment to correct position of terminal block as shown on the diagram.

SAMSUNG

2015.3

Samsung Electronics Co., Ltd.
B2B PM / SE

Head Office (Suwon Korea) : 416, Maetan 3-dong, Yeongtong-gu, Suwon-Si, Gyeonggi-do, Korea 443-742
Website : www.samsung.com Email : airconditioner@samsung.com
※ Images and data in this book may subject to change without prior notice.